L&L
Luce&Light

Made in Italy

PLATE FOR GROUND INSTALLATION
PIASTRA PER INSTALLAZIONE A TERRA
PLATINE POUR INSTALLATION AU SOL
MONTAGEPLATTE
PLACA PARA FIJACIÓN EN SUELO

WT000001

Accessories / Accessori / Accessoires / Zubehör / Accesorios

+DWT000001
rev. 02 16/05/2025
C90

1

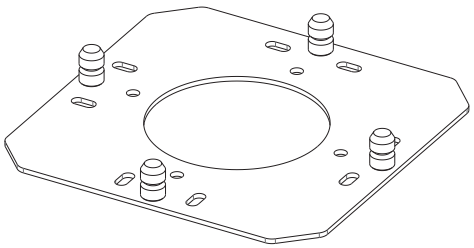

2

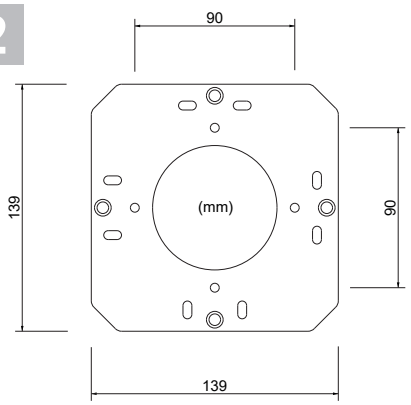

3

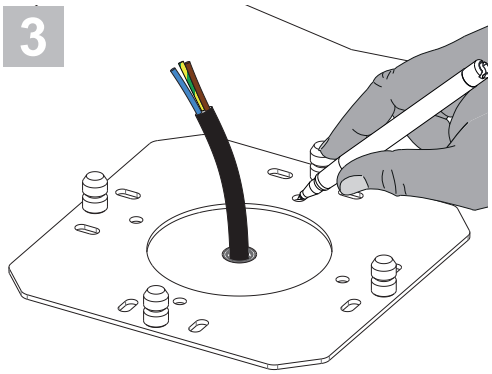

4

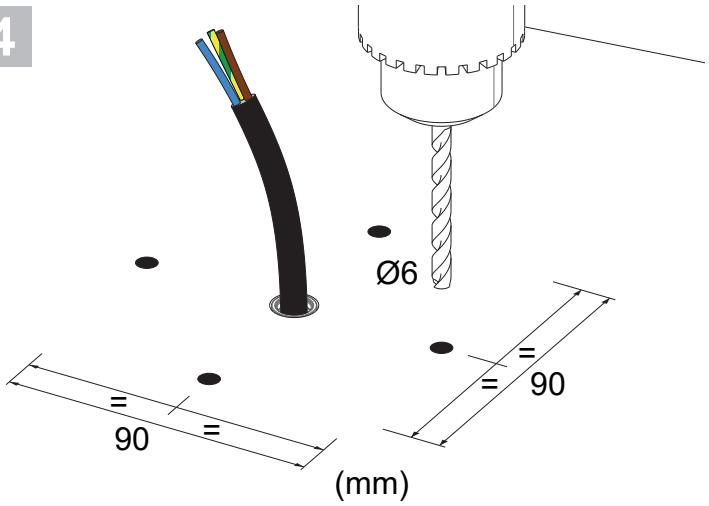

5

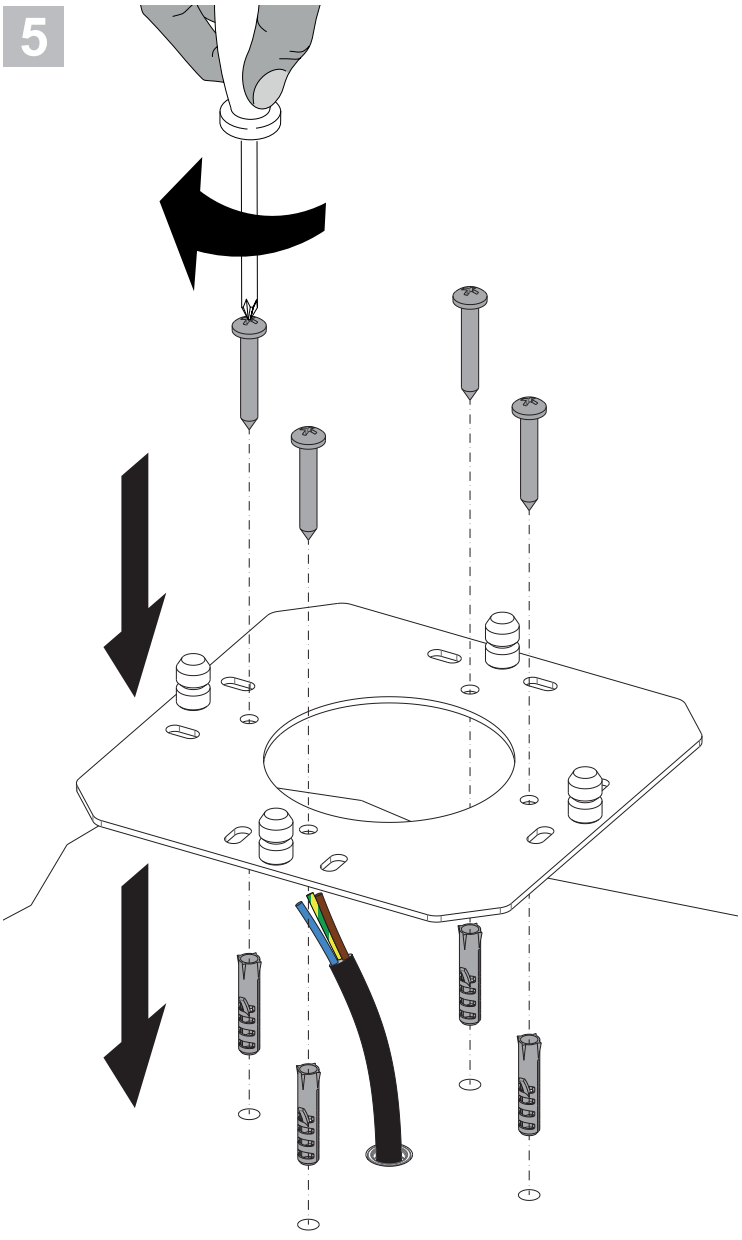

6

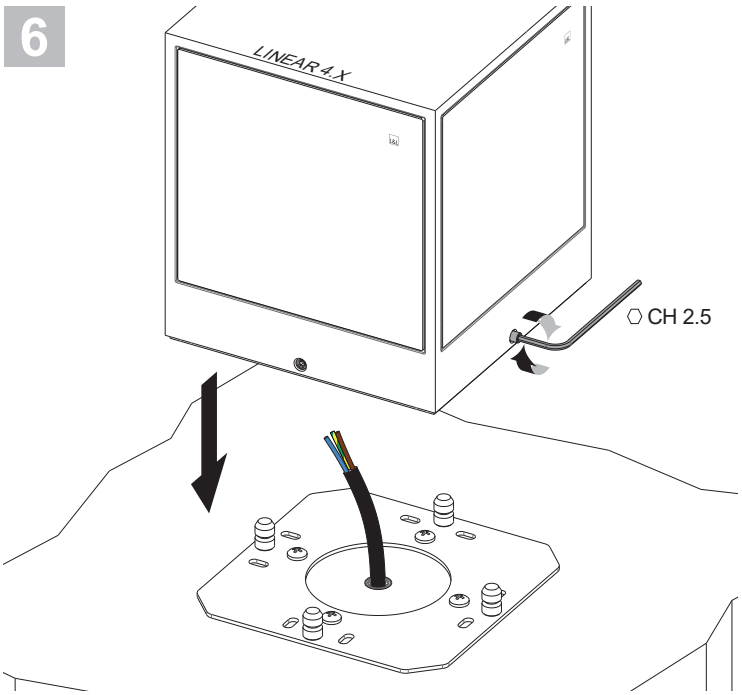

L&L Luce&Light srl / Via Trescalini, 5 / 36031 Dueville, Vicenza / Italy / T +39 0444 36 05 71 / F +39 0444 59 43 04
E lucelight@lucelight.it / www.lucelight.it