L&L
Luce&Light

Made in Italy

ROUND HONEYCOMB LOUVRE (COMBINA D 3)
NIDO D'APE TONDO (COMBINA D 3)
GRILLE NID D'ABEILLE ROND (COMBINA D 3)
RUNDEN WABENRASTER (COMBINA D 3)
REJILLA PANAL DE ABEJA REDONDO (COMBINA D 3)

+DWHCC30A1
rev. 02 17/05/2023
C90

WHCC30A1

Accessories / Accessori / Accessoires / Zubehör / Accesorios

CE UK CA

1

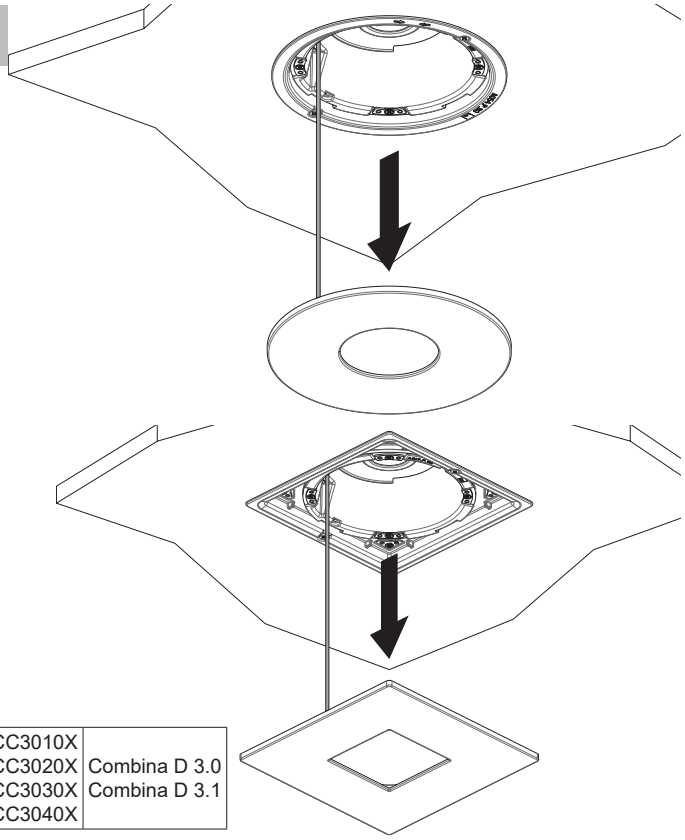

WZCC3010X WZCC3020X WZCC3030X WZCC3040X	Combina D 3.0 Combina D 3.1

2

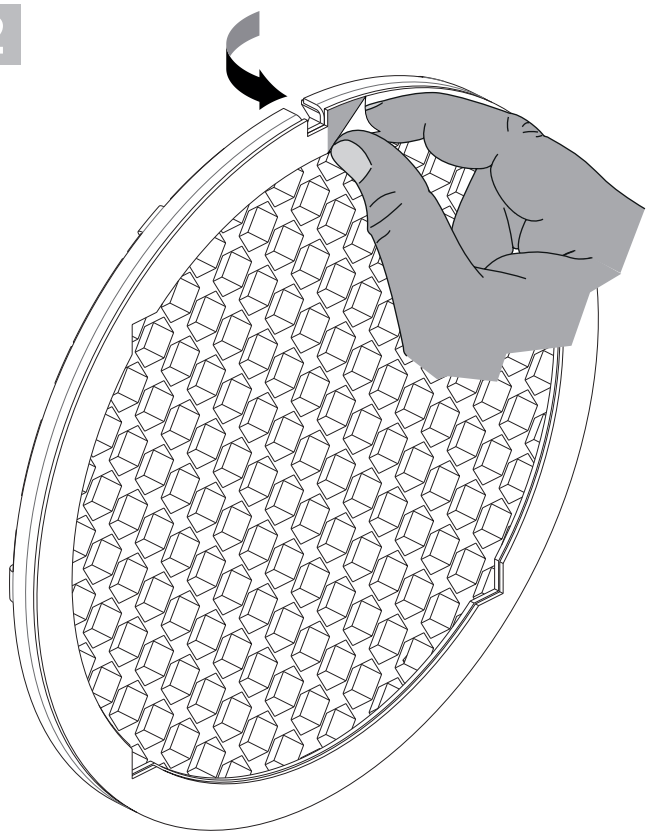

3

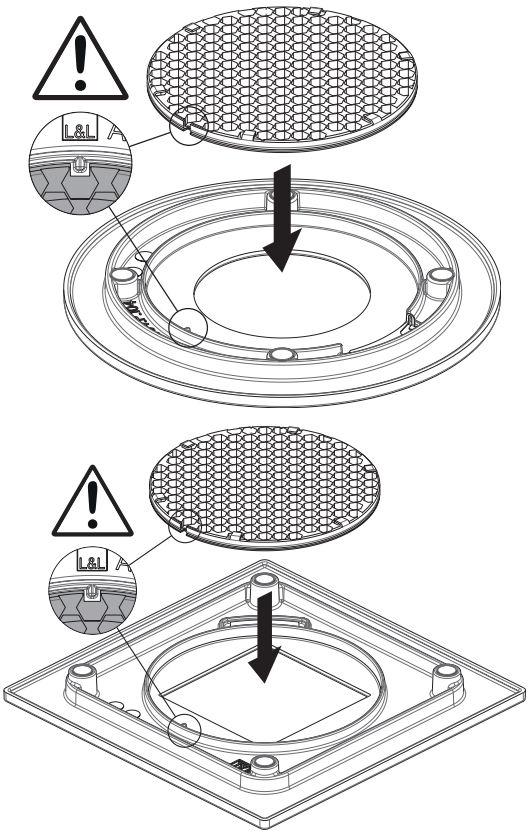

4

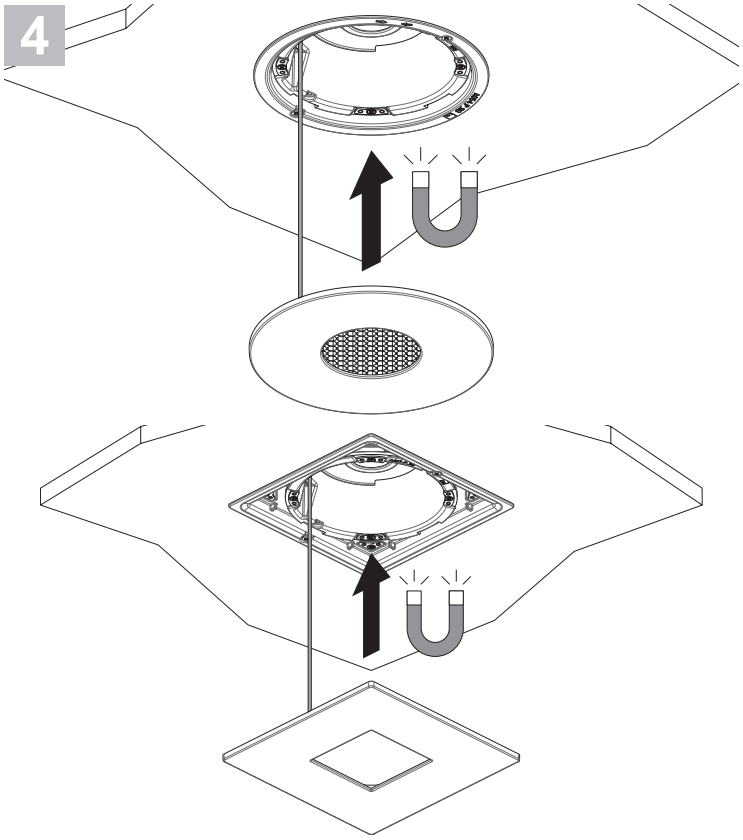

L&L Luce&Light srl / Via Trescalini, 5 / 36031 Dueville, Vicenza / Italy / T +39 0444 36 05 71 / F +39 0444 59 43 04
E lucelight@lucelight.it / www.lucelight.it