L&L
Luce&Light

Made in Italy

FIXING SPRING
MOLLA DI FISSAGGIO
RESSORT DE FIXATION
FIXIERFEDER
MUELLE DE FIJACIÓN

+DWG050200
rev. 03 24/04/2025
C90

WG0502

Accessories / Accessori / Accessoires / Zubehör / Accesorios

CE UK CA

1

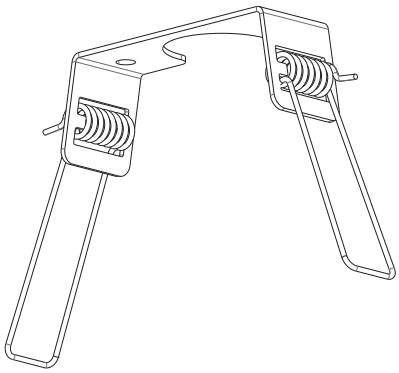

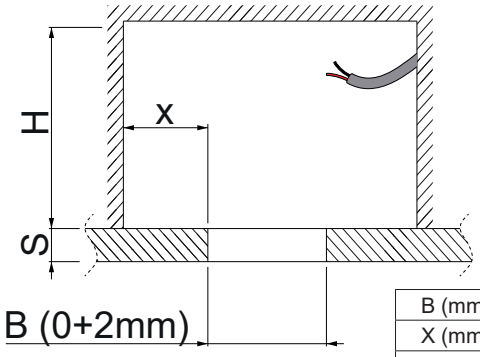

B (mm)	Ø75
X (mm)	60 min
S (mm)	0≥25
H min (mm)	140

2

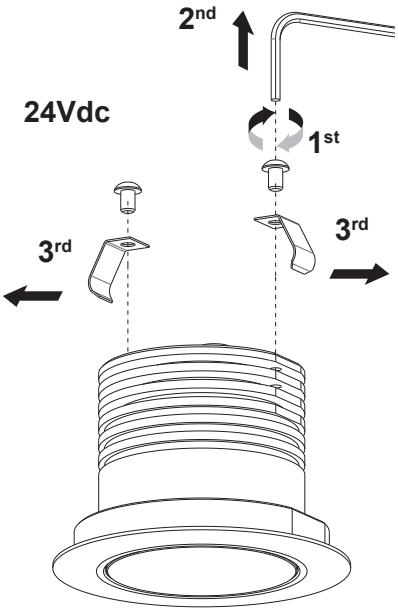

3

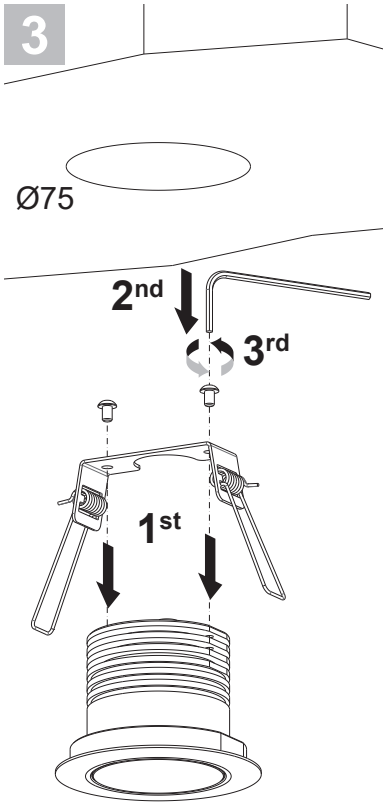

4

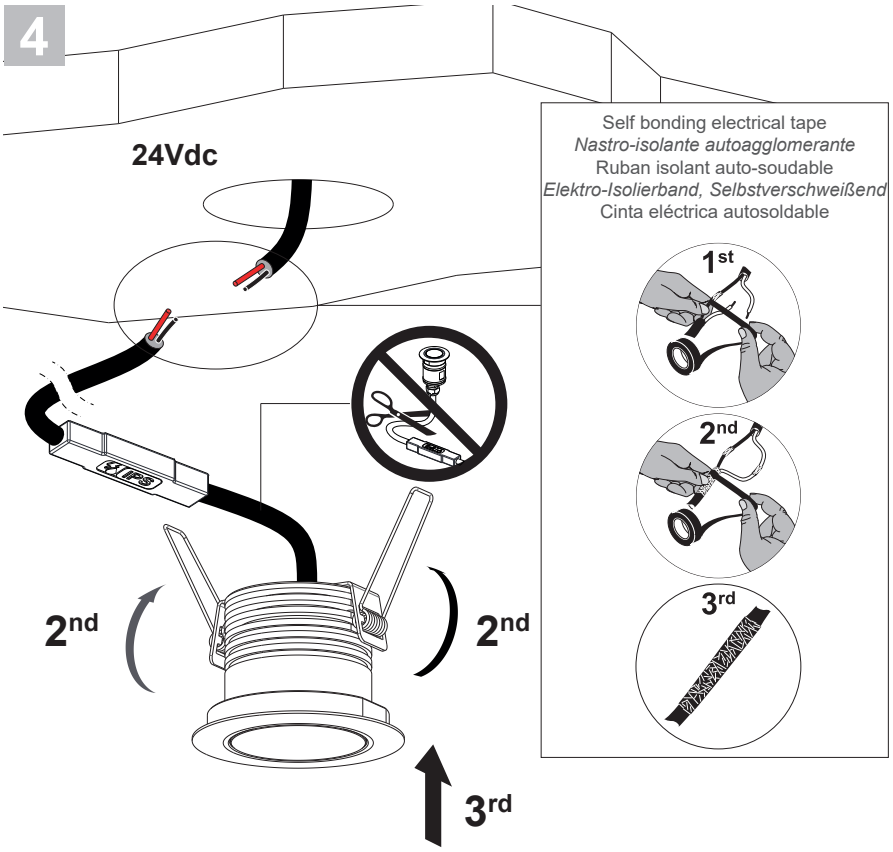

5

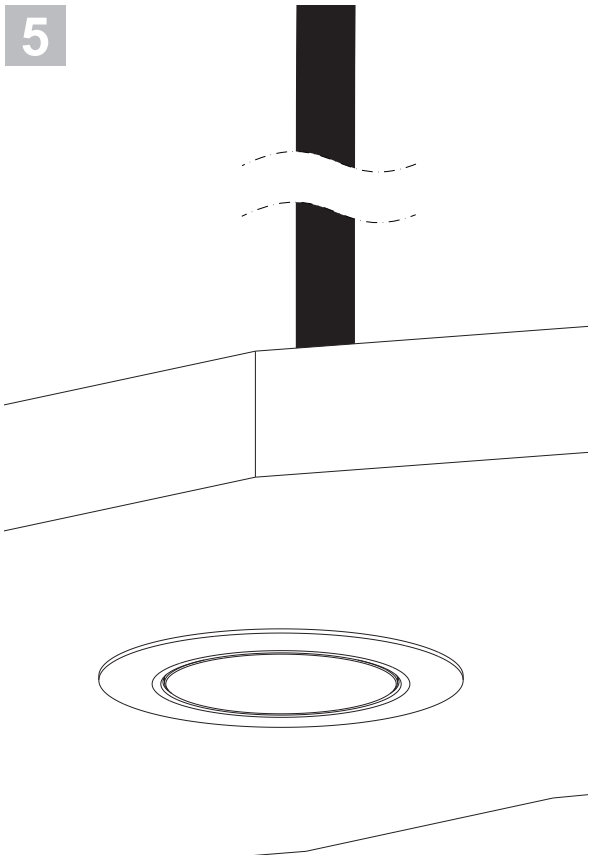

L&L Luce&Light srl / Via Trescalini, 5 / 36031 Dueville, Vicenza / Italy / T +39 0444 36 05 71 / F +39 0444 59 43 04
E lucelight@lucelight.it / www.lucelight.it