L&L
Luce&Light

Made in Italy

FIXING SPRING
MOLLA DI FISSAGGIO
RESSORT DE FIXATION
FIXIERFEDER
MUELLE DE FIJACIÓN

WG0501

Accessories / Accessori / Accessoires / Zubehör / Accesorios

+DWG050100
rev. 03 24/04/2025
C90

CE UK CA

1

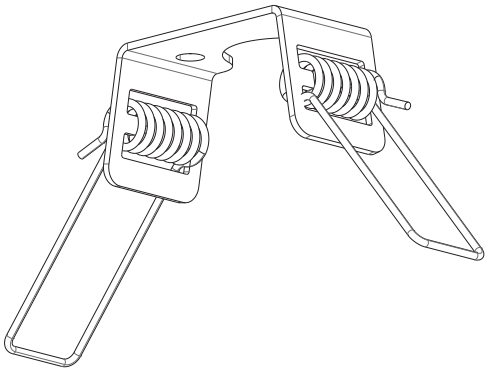

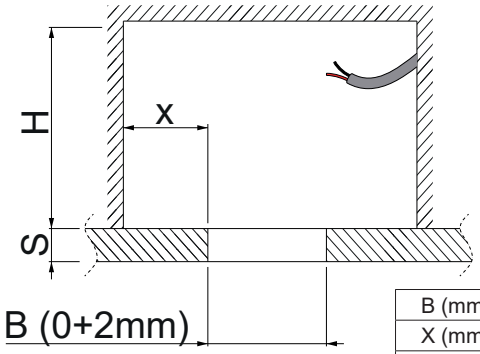

B (mm)	Ø48
X (mm)	60 min
S (mm)	0≥25
H min (mm)	110

2

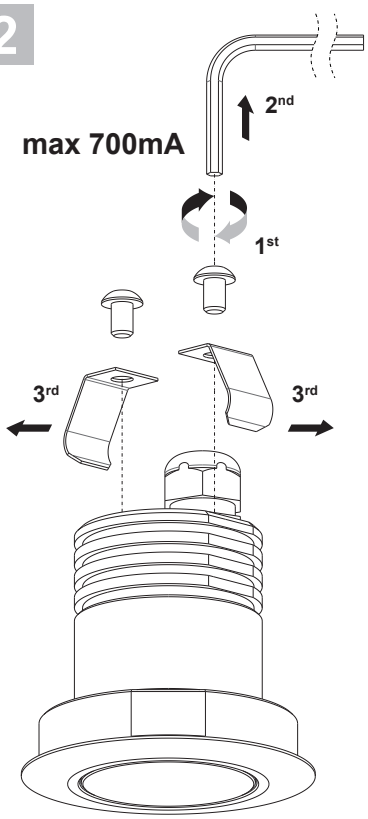

3

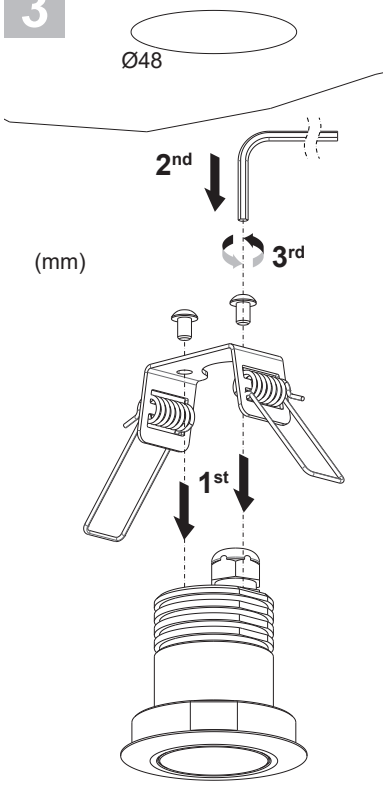

4

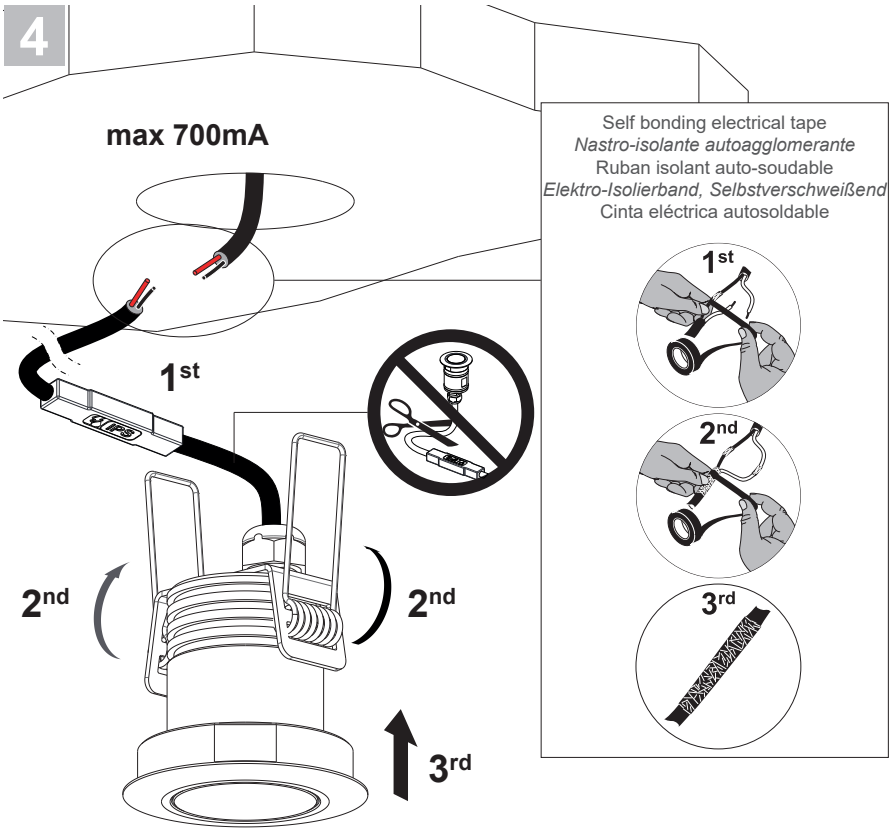

Self bonding electrical tape
Nastro-isolante autoagglomerante
Ruban isolant auto-soudable
Elektro-Isolierband, Selbstverschweißend
Cinta eléctrica autosoldable

5

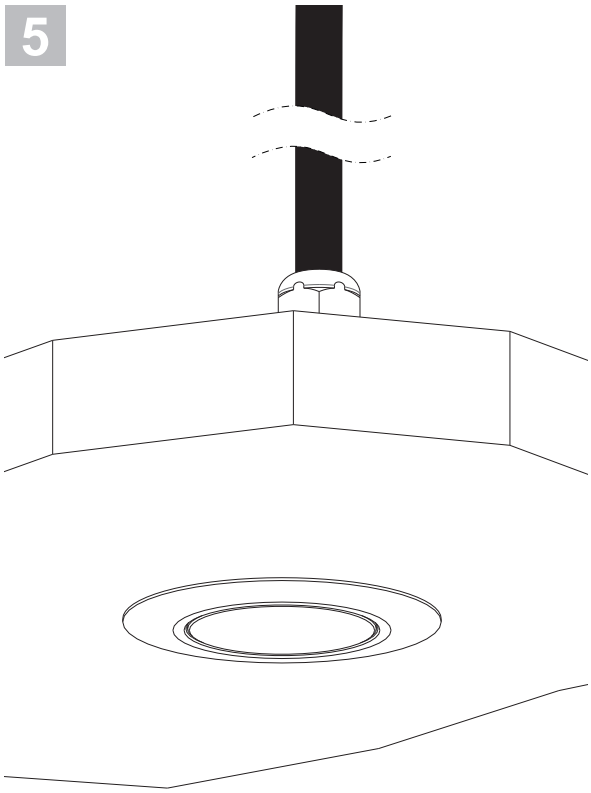

L&L Luce&Light srl / Via Trescalini, 5 / 36031 Dueville, Vicenza / Italy / T +39 0444 36 05 71 / F +39 0444 59 43 04
E lucelight@lucelight.it / www.lucelight.it