L&L
Luce&Light

Made in Italy

FIXING SPRINGS
MOLLE DI FISSAGGIO
RESSORTS DE FIXATION
FIXIERFEDERN
MUELLES DE FIJACIÓN

WG0100

Accessories / Accessori / Accessoires / Zubehör / Accesorios

+DWG010000
rev. 04 12/05/2023
C90

CE UK CA

1

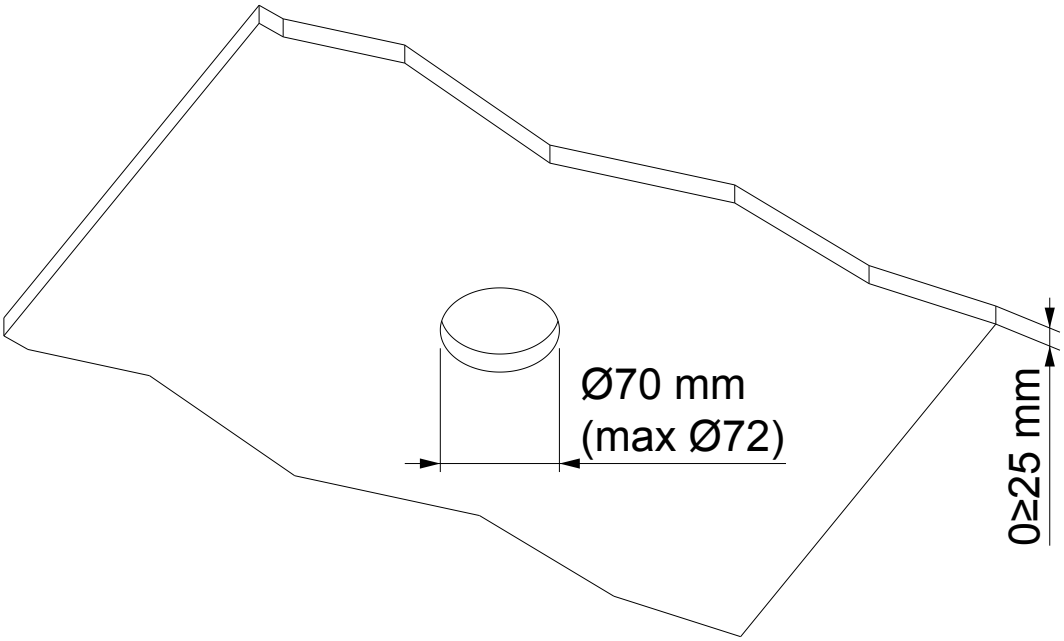

2

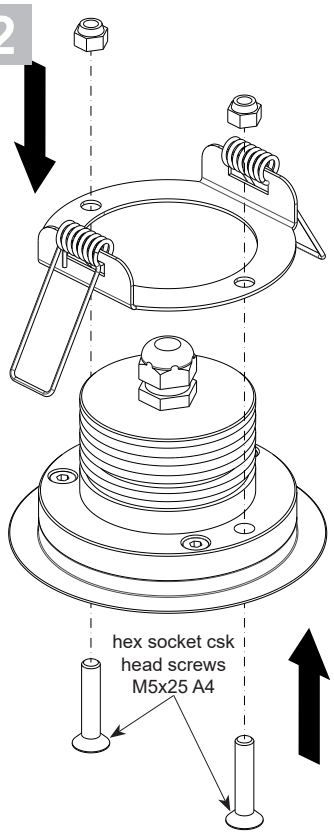

3

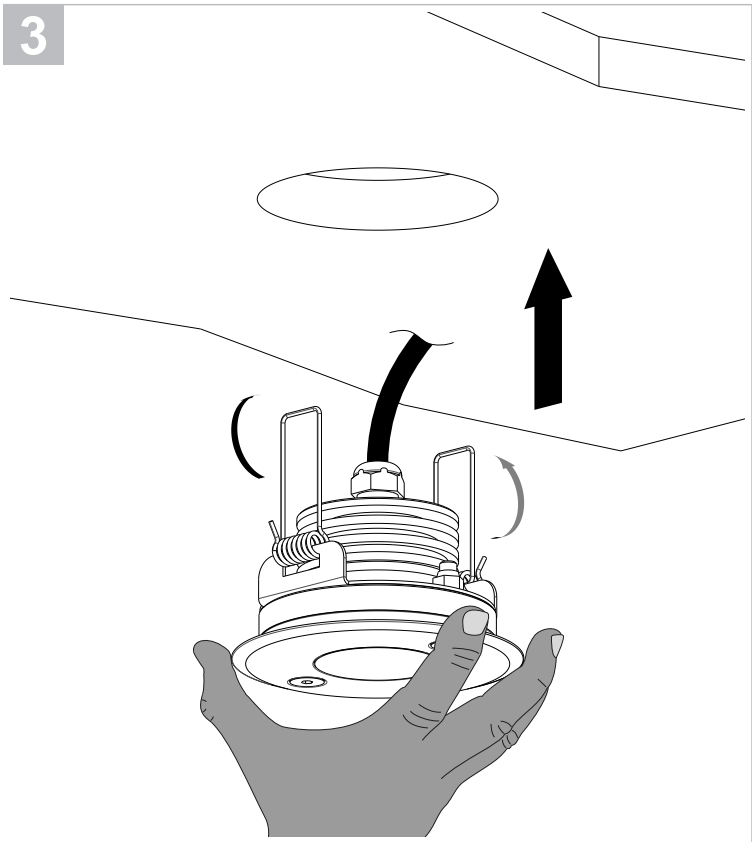

4

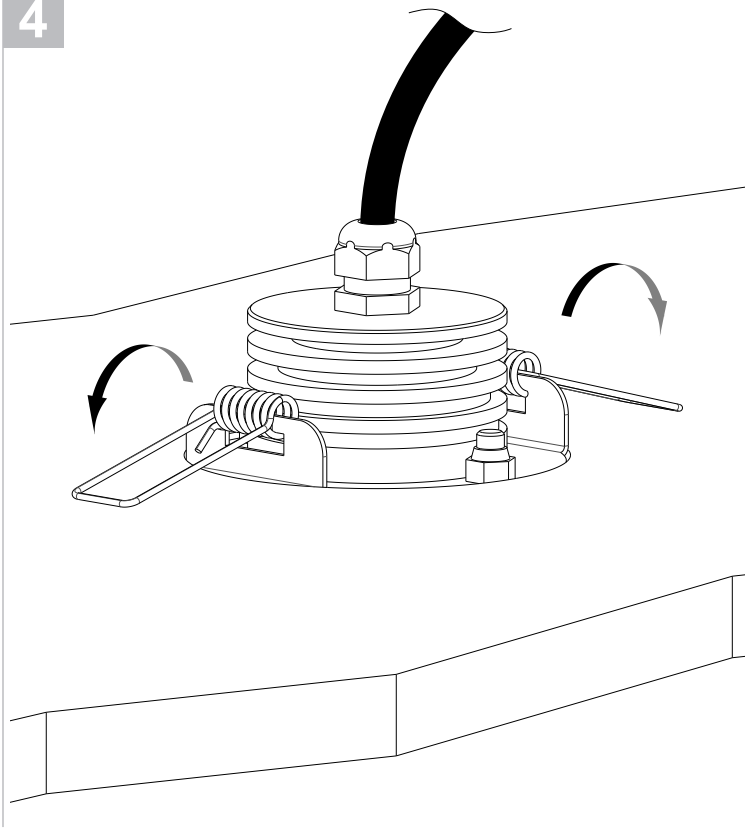

L&L Luce&Light srl / Via Trescalini, 5 / 36031 Dueville, Vicenza / Italy / T +39 0444 36 05 71 / F +39 0444 59 43 04
E lucelight@lucelight.it / www.lucelight.it