Made in Italy

25/11/2026 Rev. 07/2024

Quilatero 2.4, code: QL2410000050SI

Recessed for outdoor applications

kg 2000 - kN 20 kg 1,02 IP68 72h IP66 IP69 IK10

PID T max 40°C A F



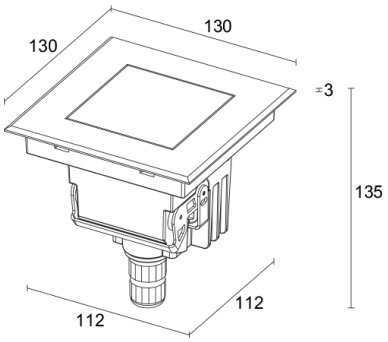

DESCRIPTION

recessed for outdoor applications; drive-over up to 2000 kg; walkover; recessed (wall, floor); Power consumption: 8W; Power supply: 110-230Vac; Lumen output at source: 657 lm (3000K, CRI 80); Delivered lumen output: 482 lm (3000K, CRI 80, 12°); 1 high-intensity power LED, 3-step MacAdam, 50 000h L90 B10 (Ta 25°C); LED colour: 3000K; Optics: 18° tiltable +20°: optical system consisting of a high-efficiency, deep-set TIR lens combined with a high-quality technical filter; CRI Colour Rendering Index: 80; Body material: body made of heat-dissipating, carbon-fibre-reinforced semicrystalline technopolymer with a thermal conductivity equal to that of stainless steel and high resistance to impact and sub-zero temperatures, and to corrosion even in harsh (saline) environments. Trim in AISI 316L stainless steel, laser cut, machined and finished with a special AC19® treatment developed by Luce&Light, to guarantee excellent corrosion resistance of more than 2000 hours of salt spray; Finishes: stainless steel; RAL finish on request; Screen material: 10-mm-thick transparent extra-clear glass, high transmittance to ensure chromatic uniformity of light, serigraphed grey (RAL 7015), and tempered for excellent impact and scratch resistance; Seals: the silicone rubber gaskets guarantee maximum resistance to UV rays and unchanging mechanical characteristics over time; Installation: product complete with IP68 connector and built-in IPS system. Compatible with H07RN-F cable with minimum cross-section 2x1 and cable Ø min. 7 mm max. 12 mm. Simplified connection for quick, effective installation. Easy installation on the relative outer casing using mounting clip built into the lighting fixture; built-in power supply unit; Ingress protection: IP68 72h, IP66, IP69; Impact resistance: IK10; optics tiltable by up to 20° by means of a magnetic system with graduations and locking screw. Fast installation: direct connection between fixture and mains power supply; Protection systems: IPS (Intelligent Protection System) protects lighting fixtures from water infiltrations, which can occur if there are faulty junctions between the cables in outdoor or underwater applications. This innovation, patented by L&L, also guarantees electrical protection against polarity reversal, hot plugging, ESD and power surges, which can occur if there are faults in the electrical circuit; The PID (Protective Impedance Device) protects lighting fixtures from electrical phenomena external to the system, such as static electricity accumulation or electromagnetic interference coming from the mains power. Generally, these are events with a low energy content; Operating temperature: -20°C — +45°C; Maximum device temperature: 40°C (Ta 25°C); Glow wire test: 960°C; Photobiological safety: in accordance with IEC TR 62778:2014; Appliance class: class II; Weight: 1020 g; Dimensions: 130x130x135 mm; Energy efficiency class: F (light source) in accordance with EU 2019/2015; Accessories: WCA14 Outer casing; tested and approved via E.O.L. (End Of Line) test with functioning test and check of electrical power consumption

Status: Available

ELECTRICAL CHARACTERISTICS	
Power consumption	8W
Power supply	110-230Vac
Power supply unit	built-in power supply unit
LIGHTING CHARACTERISTICS	
Number and type of LED	1 high-intensity power LED
Average LED life	50 000h L90 B10 (Ta 25°C)
LED colour	3000K
CRI Colour Rendering Index	80
Binning	3-step MacAdam
Optics	18° tiltable +20°
Lumen output at source	657 lm (3000K, CRI 80)
Delivered lumen output	482 lm (3000K, CRI 80, 12°)
MECHANICAL CHARACTERISTICS	
Dimensions	130x130x135 mm
Weight	1020 g
Finishes	stainless steel
Mounting	with outer casing
Body material	body in thermally conductive technopolymer, trim in AISI 316L stainless steel with a special AC19® treatment developed by Luce&Light
Screen material	screen in serigraphed-grey and transparent, tempered extra-clear glass
GENERAL CHARACTERISTICS	
Ingress protection	IP68 72h, IP66, IP69
Operating temperature	-20°C — +45°C
Impact resistance	IK10
Features	optics tiltable by up to 20° by means of a magnetic system with graduations and locking screw. Fast installation: direct connection between fixture and mains power supply
Energy efficiency class	F (light source) in accordance with EU 2019/2015
Glow wire test	960°C
Maximum device temperature	40°C (Ta 25°C)
Appliance class	class II
Walkover	yes
Drive-over	up to 2000 kg
Protection systems	IPS (Intelligent Protection System); PID (Protective Impedance Device)
Photobiological safety	in accordance with IEC TR 62778:2014

PHOTOMETRIC DATA

S – 18° CRI80

H (m)	∅ (m)	Lux max (3000K)
1.00	0.31	3399
2.00	0.62	850
3.00	0.92	378
4.00	1.23	212
5.00	1.54	136

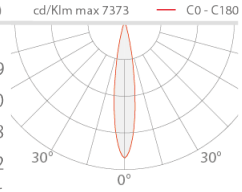

ACCESSORIES

Installation Accessories

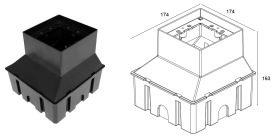

WCA14
Outer casing
Required outer casing not included

L&L Luce&Light SRL reserves the right to change the information contained in this document at any time without prior notice being given.