Made in Italy

25/11/2026 Rev. 10/2024

Pivot 2.0, code: CP2000000050MU-1

Projectors for outdoor applications

kg 0,64 IP66 IK08



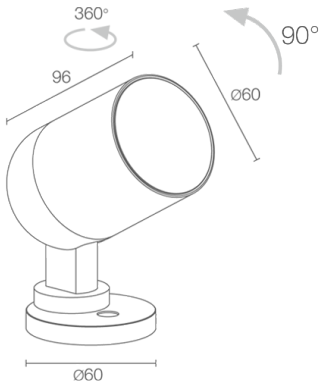

DESCRIPTION

projector for outdoor applications; surface mounted (ceiling, wall, ground, spike), surface mounted (ceiling, wall, floor); Power consumption: 10W; Power supply: 24Vdc; Lumen output at source: 978 lm (3000K, 10W, CRI 80); Delivered lumen output: 835 lm (3000K, 25°, 10W, CRI 80); 1 COB LED, 3-step MacAdam, 50 000h L95 B10 (Ta 25°C); LED colour: 3000K; Optics: 25°: optical system consisting of a high-efficiency TIR lens; CRI Colour Rendering Index: 80; Body material: body made of ANTICORODAL EN AW 6082 low-copper-content aluminium alloy for excellent resistance to corrosion, made entirely on a CNC lathe; Finishes: copper finish obtained through an initial treatment with a ceramic nanoparticle coating, to prepare for painting, followed by a coat of epoxy paint and one of polyester paint to provide corrosion resistance of more than 1000 hours of salt spray; RAL finish on request; Screen material: 3-mm-thick transparent extra-clear glass with vitrified serigraphy, high transmittance to ensure chromatic uniformity of light and tempered for excellent resistance to knocks and scratches; Seals: The NBR nitrile rubber O-rings ensure the fixture's IP rating is preserved, guaranteeing continued protection; power supply unit not included; includes 5 m neoprene cable, H05RN-F 2x0,35/0,75 Ø6,3 mm; Ingress protection: IP66; Impact resistance: IK08; manual zoom lens adjustable using magnet included 13°x68° optics adjustable through 360° using magnet included; Protection systems: IPS (Intelligent Protection System) protects lighting fixtures from water infiltrations, which can occur if there are faulty junctions between the cables in outdoor or underwater applications. This innovation, patented by L&L, also guarantees electrical protection against polarity reversal, hot plugging, ESD and power surges, which can occur if there are faults in the electrical circuit; Operating temperature: -20°C — +45°C; Glow wire test: 960°C; Photobiological safety: photobiological safety: risk group 1 according to EN 62471:2006; Appliance class: class III; Weight: 640 g; Dimensions: Ø60x96 mm; Energy efficiency class: F (light source) in accordance with EU 2019/2015; Accessories: WB1001U Standard snoot - copper, WB1002U Asymmetrical snoot - copper, WB1003N Barn doors - black, WP0100 Spike for in-ground installation; tested and approved via E.O.L. (End Of Line) test with functioning test and check of electrical power consumption

Status: Available

ELECTRICAL CHARACTERISTICS	
Power consumption	10W
Power supply	24Vdc
Power supply unit	power supply unit not included
LIGHTING CHARACTERISTICS	
Number and type of LED	1 COB LED
Average LED life	50 000h L95 B10 (Ta 25°C)
LED colour	3000K
CRI Colour Rendering Index	80
Binning	3-step MacAdam
Optics	25°
Lumen output at source	978 lm (3000K, 10W, CRI 80)
Delivered lumen output	835 lm (3000K, 25°, 10W, CRI 80)
MECHANICAL CHARACTERISTICS	
Dimensions	Ø60x96 mm
Weight	640 g
Finishes	copper
Mounting	with screws and plugs
Body material	body in anticorodal aluminium
Screen material	screen in serigraphed, transparent, tempered extra-clear glass
GENERAL CHARACTERISTICS	
Ingress protection	IP66
Operating temperature	-20°C — +45°C
Impact resistance	IK08
Features	manual zoom lens adjustable using magnet included 13°x68° optics adjustable through 360° using magnet included
Energy efficiency class	F (light source) in accordance with EU 2019/2015
Glow wire test	960°C
Appliance class	class III
Walkover	no
Drive-over	no
Power cables	includes 5 m neoprene cable, H05RN-F 2x0,35/0,75 Ø6,3 mm
Protection systems	IPS (Intelligent Protection System)
Photobiological safety	photobiological safety: risk group 1 according to EN 62471:2006

PHOTOMETRIC DATA

M – 25° CRI80

H (m)	∅ (m)	Lux max (3000K) 10W	14W
1.00	0.45	3746	4773
2.00	0.89	936	1193
3.00	1.34	416	530
4.00	1.78	234	298
5.00	2.23	150	191

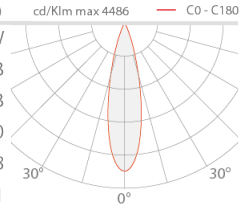

ACCESSORIES

Installation Accessories

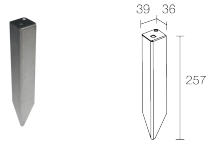

WP0100
Spike for in-ground installation

Anti-glare

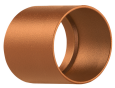

WB1001U
Standard snoot - copper



WB1002U
Asymmetrical snoot - copper



WB1003N
Barn doors - black

L&L Luce&Light SRL reserves the right to change the information contained in this document at any time without prior notice being given.