Made in Italy

24/11/2026 Rev. 12/2024

Bright 5.F, code: CB5F01000050SI

Recessed for outdoor applications

kg 4000 - kN 40 kg 1,35 IP65 IP68 IP69 IK10

PID NTC T max 40°C F

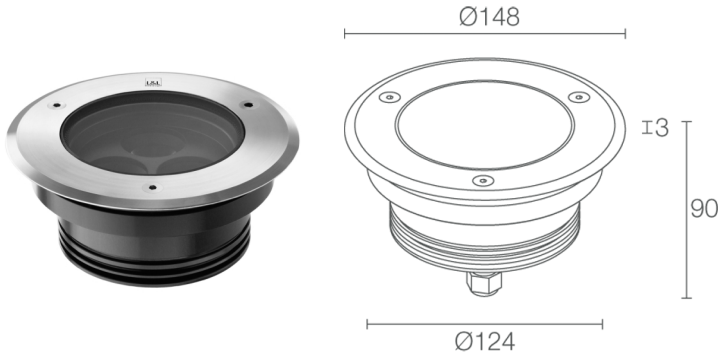

DESCRIPTION

recessed for outdoor applications (not suitable for use in immersion in swimming pools or fountains); drive-over up to 4000 kg; recessed (ceiling, wall, floor); Power consumption: 19W; Power supply: 24Vdc; Lumen output at source: 1663 lm (3000K, 19W, CRI 80); Delivered lumen output: 1208 lm (3000K, 12°, 19W, CRI 80); 3 high-intensity power LEDs, 3-step MacAdam, 50 000h L95 B10 (Ta 25°C); LED colour: 3000K; Optics: 18°: optical system consisting of 3 high-efficiency TIR lenses combined with a high-quality technical filter; CRI Colour Rendering Index: 80; Body material: body made of ANTICORODAL 6082 aluminium alloy, made entirely on a CNC lathe and then electro-coloured black. Trim in AISI 316L stainless steel, made with a CNC lathe; Screen material: 10-mm-thick transparent extra-clear glass, high transmittance to ensure chromatic uniformity of light, serigraphed grey and tempered for excellent resistance to knocks and scratches; Seals: the silicone rubber gaskets guarantee maximum resistance to UV rays and unchanging mechanical characteristics over time; Thickness of installation surface: min 5 mm, max 25 mm; power supply unit not included; includes 1.50 m neoprene cable, H05RN-F 2x0.75/0.75 Ø6.3 mm; Ingress protection: IP65, IP68, IP69; Impact resistance: IK10; 67°x11° optics adjustable through 360° using the magnet provided; Protection systems: IPS (Intelligent Protection System) protects lighting fixtures from water infiltrations, which can occur if there are faulty junctions between the cables in outdoor or underwater applications. This innovation, patented by L&L, also guarantees electrical protection against polarity reversal, hot plugging, ESD and power surges, which can occur if there are faults in the electrical circuit; The PID (Protective Impedance Device) protects lighting fixtures from electrical phenomena external to the system, such as static electricity accumulation or electromagnetic interference coming from the mains power. Generally, these are events with a low energy content; This is an NTC thermistor mounted on the LED board to protect the lighting fixture against overheating. Should the product function at an operating temperature greater than the maximum temperature at which it can operate correctly, the protection is activated and gradually reduces the power. The NTC causes the integrated electronic parts to cool down to avoid the lighting fixture instantly switching itself off. When the operating temperature is again within normal range, the NTC automatically restores the lighting fixture's original operating conditions; Operating temperature: -20°C — +45°C; Maximum device temperature: 40°C (Ta 25°C); Glow wire test: 960°C; Photobiological safety: photobiological safety: risk group 1 according to EN 62471:2006; Appliance class: class III; Weight: 1350 g; Dimensions: Ø148x90 mm; Cutout dimensions: Ø125 mm; Volume of thermal heatsink: Ø260x150 mm; Energy efficiency class: F (light source) in accordance with EU 2019/2015; Accessories: WC0501 Outer casing, WC0601 Outer casing, WC0701 Outer casing, WE0201 Magnet for adjustable optics and zoom lens, WG0200 Retaining spring clip for installation on plasterboard Ø130mm; tested and approved via E.O.L. (End Of Line) test with functioning test and check of electrical power consumption

Status: Available

ELECTRICAL CHARACTERISTICS	
Power consumption	19W
Power supply	24Vdc
Power supply unit	power supply unit not included
LIGHTING CHARACTERISTICS	
Number and type of LED	3 high-intensity power LEDs
Average LED life	50 000h L95 B10 (Ta 25°C)
LED colour	3000K
CRI Colour Rendering Index	80
Binning	3-step MacAdam
Optics	18°
Lumen output at source	1663 lm (3000K, 19W, CRI 80)
Delivered lumen output	1208 lm (3000K, 12°, 19W, CRI 80)
MECHANICAL CHARACTERISTICS	
Dimensions	Ø148x90 mm
Weight	1350 g
Mounting	with outer casing
Body material	body in black-anodized anticorodal aluminium, trim in AISI 316L stainless steel
Screen material	screen in serigraphed-grey and transparent, tempered extra-clear glass
Cutout dimensions	Ø125 mm
Volume of thermal heatsink	Ø260x150 mm
GENERAL CHARACTERISTICS	
Ingress protection	IP65, IP68, IP69
Operating temperature	-20°C — +45°C
Impact resistance	IK10
Features	67°x11° optics adjustable through 360° using the magnet provided
Energy efficiency class	F (light source) in accordance with EU 2019/2015
Glow wire test	960°C
Maximum device temperature	40°C (Ta 25°C)
Appliance class	class III
Walkover	yes
Drive-over	up to 4000 kg
Power cables	includes 1.50 m neoprene cable, H05RN-F 2x0.75/0.75 Ø6.3 mm
Protection systems	IPS (Intelligent Protection System); PID (Protective Impedance Device); NTC (thermistor mounted on LED board)
Photobiological safety	photobiological safety: risk group 1 according to EN 62471:2006

PHOTOMETRIC DATA

S - 18° CRI 80

H (m)	Ø (m)	Lux max (3000K) 19W
2.00	0.63	2230
4.00	1.26	558
6.00	1.89	248
8.00	2.52	139
10.00	3.15	89

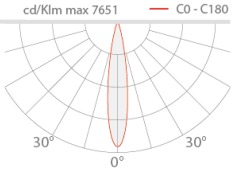

ACCESSORIES

Installation Accessories



WC0501
Outer casing

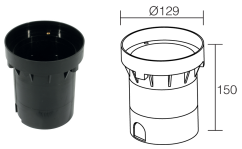

WC0601
Outer casing



WC0701
Outer casing



WG0200
Retaining spring clip for installation on plasterboard Ø130mm

Other



WE0201
Magnet for adjustable optics and zoom lens

L&L Luce&Light SRL reserves the right to change the information contained in this document at any time without prior notice being given.