Made in Italy

25/11/2026 Rev. 09/2024

## Cube C 1.2, code: CU12325SE

Ceiling mounted for outdoor applications

kg 0,40 IP54



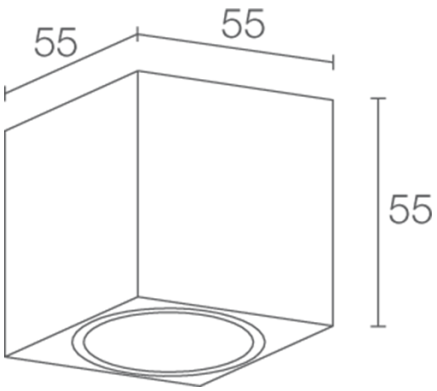


### DESCRIPTION

ceiling mounted for outoor applications; surface mounted (ceiling); Power consumption: max 6W; Power supply: max 500mA; Lumen output at source: 410 lm (3000K, 500mA); Delivered lumen output: 337 lm (3000K, 500mA, 28°); 3 power LEDs, 1/4 ANSI BIN, 50 000h L90 B10 (Ta 25°C); LED colour: 3000K; Optics: 18°; CRI Colour Rendering Index: 80; Body material: body in anodized aluminium; Finishes: white (RAL 9003); RAL finish on request; Screen material: screen in frosted plexiglass; power supply unit not included; Wiring: series; includes 2x0.30 m single-core cables; Control system: dimming via dimmable driver; Ingress protection: IP54; Operating temperature: -20°C — +45°C; Photobiological safety: photobiological safety: risk group 1 according to EN 62471:2006; Appliance class: class III; Weight: 400 g; Dimensions: 55x55x55 mm; Energy efficiency class: F (light source) in accordance with EU 2019/2015; tested and approved via E.O.L. (End Of Line) test with functioning test and check of electrical power consumption

Status: Available

| | |
|---|---|
| **ELECTRICAL CHARACTERISTICS** | |
| Power consumption | max 6W |
| Power supply | max 500mA |
| Power supply unit | power supply unit not included |
| Control system | dimming via dimmable driver |
| Wiring | series |
| **LIGHTING CHARACTERISTICS** | |
| Number and type of LED | 3 power LEDs |
| Average LED life | 50 000h L90 B10 (Ta 25°C) |
| LED colour | 3000K |
| CRI Colour Rendering Index | 80 |
| Binning | 1/4 ANSI BIN |
| Optics | 18° |
| Lumen output at source | 410 lm (3000K, 500mA) |
| Delivered lumen output | 337 lm (3000K, 500mA, 28°) |
| **MECHANICAL CHARACTERISTICS** | |
| Dimensions | 55x55x55 mm |
| Weight | 400 g |
| Finishes | white RAL 9003 |
| Mounting | with screws and plugs |
| Body material | body in anodized aluminium |
| Screen material | screen in frosted plexiglass |
| **GENERAL CHARACTERISTICS** | |
| Ingress protection | IP54 |
| Operating temperature | -20°C — +45°C |
| Energy efficiency class | F (light source) in accordance with EU 2019/2015 |
| Appliance class | class III |
| Walkover | no |
| Drive-over | no |
| Power cables | includes 2x0.30 m single-core cables |
| Photobiological safety | photobiological safety: risk group 1 according to EN 62471:2006 |

## PHOTOMETRIC DATA

S - 18°

| H (m) | ∅ (m) | 6W |
|---|---|---|
| 1.00 | 0.35 | 1872 |
| 2.00 | 0.69 | 468 |
| 3.00 | 1.04 | 208 |
| 4.00 | 1.38 | 117 |
| 5.00 | 1.73 | 75 |

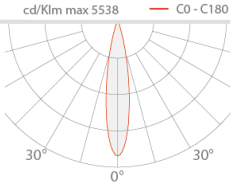


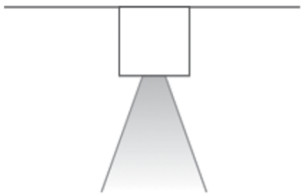

L&L Luce&Light SRL reserves the right to change the information contained in this document at any time without prior notice being given.