Made in Italy

25/11/2026 Rev. 08/2024

Bitpop 1.0, code: BP101015LB0

Recessed for indoor applications

230Vac kg 0,26 43x43 mm IP40



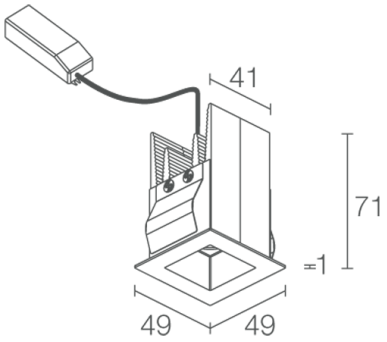

DESCRIPTION

recessed downlight for indoor applications; recessed (ceiling: rebated or deep set); Power consumption: 8W; Power supply: 230Vac; Lumen output at source: 480 lm (3000K); Delivered lumen output: 335 lm (3000K, 30°); 1 high-intensity power LED, 3-step MacAdam, 50 000h L85 B10 (Ta 25°C); LED colour: 3000K; Optics: 42°: optical system consisting of 1 TIR lens, set back inside a polycarbonate element in glossy black paste to ensure high quality and visual comfort; CRI Colour Rendering Index: >90; Body material: radiator made from aluminium profile to act as a cooling element, then anodized black; with springs in AISI 301 harmonic steel; Frame + optical comp. finish: frame for recessing in white-painted steel, optical compartment with black finish; RAL finish on request; Installation: installed by mounting with springs on plasterboard. Outer casings available for installation in solid walls or trimless installation, set 8 mm deep only on plasterboard; Thickness of installation surface: min 7.5 mm, max 20 mm; power supply unit included; includes 0.30 m cable; Control system: ON/OFF; Ingress protection: IP40; UGR < 10 for 17° and 30° optics; 2700K, 3000K: CRI >90, 4000K: CRI 80; Operating temperature: 0°C — +45°C; Photobiological safety: photobiological safety: risk group 1 according to EN 62471:2006; Appliance class: class II; Weight: 260 g; Dimensions: 49x49x71 mm; Cutout dimensions: 43x43 mm; Volume of thermal heatsink: 140x140x125 mm; Energy efficiency class: F (light source) in accordance with EU 2019/2015; Accessories: WC8700 Outer casing for flush installation in solid ceilings, WC8703 Outer casing for deep-set installation in plasterboard ceilings - white, WC8703N Outer casing for deep-set installation in plasterboard ceilings - black; tested and approved via E.O.L. (End Of Line) test with functioning test and check of electrical power consumption

Status: Available

ELECTRICAL CHARACTERISTICS	
Power consumption	8W
Power supply	230Vac
Power supply unit	power supply unit included
Control system	ON/OFF
LIGHTING CHARACTERISTICS	
Number and type of LED	1 high-intensity power LED
Average LED life	50 000h L85 B10 (Ta 25°C)
LED colour	3000K
CRI Colour Rendering Index	>90
Binning	3-step MacAdam
Optics	42°
Lumen output at source	480 lm (3000K)
Delivered lumen output	335 lm (3000K, 30°)
MECHANICAL CHARACTERISTICS	
Dimensions	49x49x71 mm
Weight	260 g
Frame + optical comp. finish	white - black
Mounting	with fixing springs or outer casing
Body material	body in black-anodized aluminium, trim in steel
Cutout dimensions	43x43 mm
Volume of thermal heatsink	140x140x125 mm
GENERAL CHARACTERISTICS	
Ingress protection	IP40
Operating temperature	0°C — +45°C
Features	UGR < 10 for 17° and 30° optics
Energy efficiency class	F (light source) in accordance with EU 2019/2015
Appliance class	class II
Walkover	no
Drive-over	no
Power cables	includes 0.30 m cable
Photobiological safety	photobiological safety: risk group 1 according to EN 62471:2006
Notes	2700K, 3000K: CRI >90, 4000K: CRI 80

PHOTOMETRIC DATA

L - 42°

H (m)	∅ (m)	Lux max (3000K) 8W	cd/Klm max 1405
0.50	0.39	1899	
1.00	0.78	475	
1.50	1.17	211	
2.00	1.56	119	
2.50	1.95	76	
3.00	2.35	53	

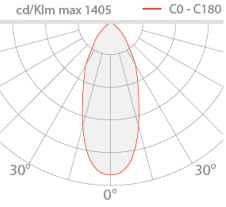

ACCESSORIES

Installation Accessories

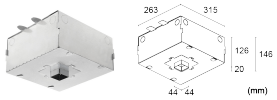

WC8700
Outer casing for flush installation in solid ceilings

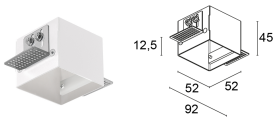

WC8703
Outer casing for deep-set installation in plasterboard ceilings - white

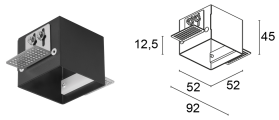

WC8703N
Outer casing for deep-set installation in plasterboard ceilings - black

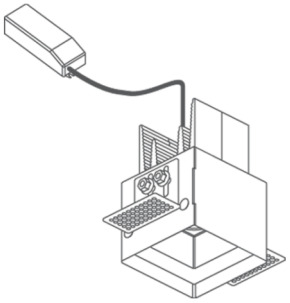

Deep-set installation with outer casing

L&L Luce&Light SRL reserves the right to change the information contained in this document at any time without prior notice being given.