L&L
Luce&Light

Made in Italy

ANTI-FALL KIT (Rio 1.1 - Rio 1.2 - Rio 1.4)
KIT ANTICADUTA (Rio 1.1 - Rio 1.2 - Rio 1.4)
KIT ANTICHUTE (Rio 1.1 - Rio 1.2 - Rio 1.4)
FALLSCHUTZ-SET (Rio 1.1 - Rio 1.2 - Rio 1.4)
KIT ANTICAÍDAS (Rio 1.1 - Rio 1.2 - Rio 1.4)

+DWN810100
rev. 04 17/05/2023
C90

WN8101

Accessories / Accessori / Accessoires / Zubehör / Accesorios

CE UK CA

1

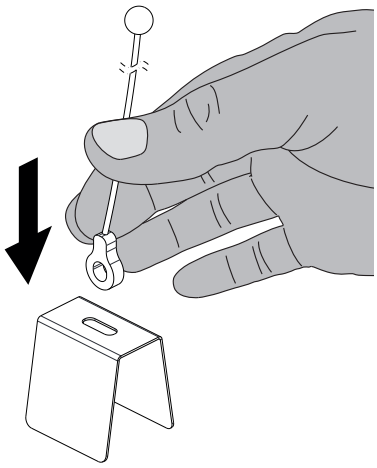

2

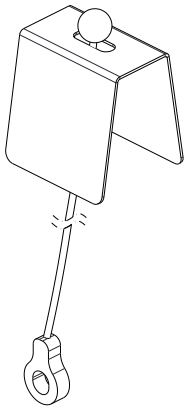

3

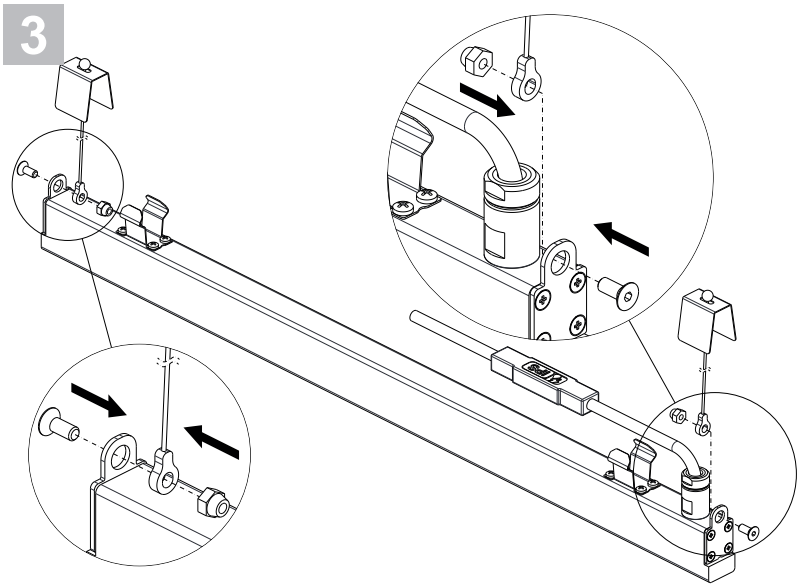

4

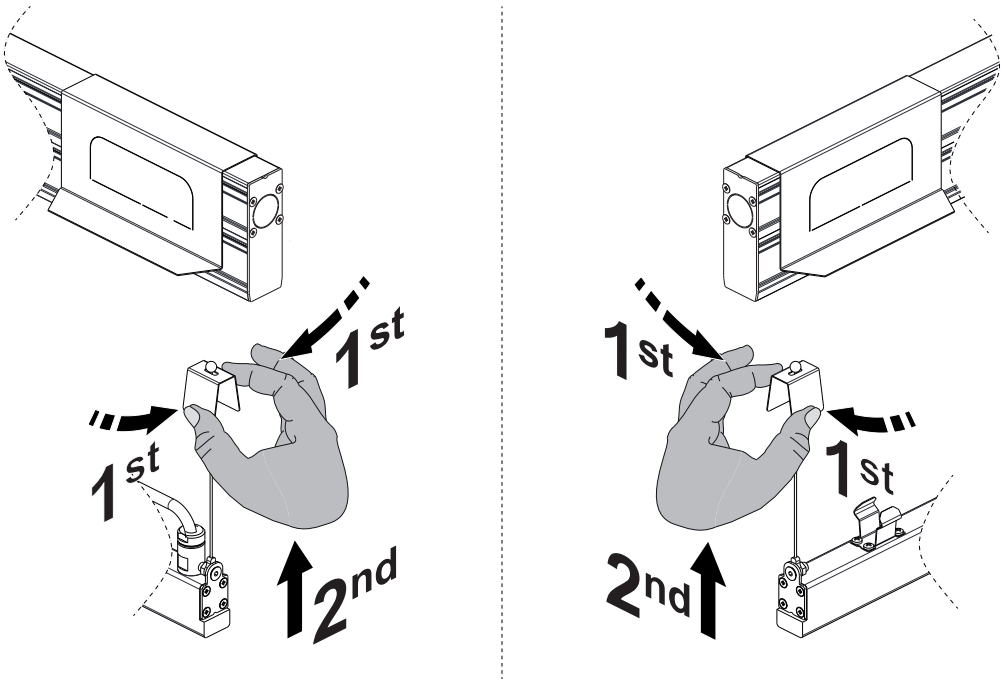

5

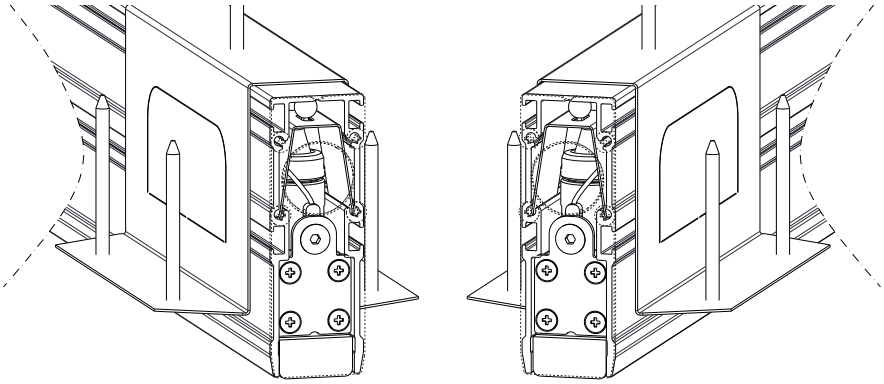

L&L Luce&Light srl / Via Trescalini, 5 / 36031 Dueville, Vicenza / Italy / T +39 0444 36 05 71 / F +39 0444 59 43 04
E lucelight@lucelight.it / www.lucelight.it