L&L
Luce&Light

Made in Italy

FIXING BASE (KRILL)
BASE DI FISSAGGIO (KRILL)
BASE DE FIXATION (KRILL)
BEFESTIGUNGSSOCKEL (KRILL)
BASE DE FIJACIÓN (KRILL)

WDA00X

Accessories / Accessori / Accessoires / Zubehör / Accesorios

+DWDA00X00
rev. 03 03/01/2024
C90

CE UK CA

AL6026

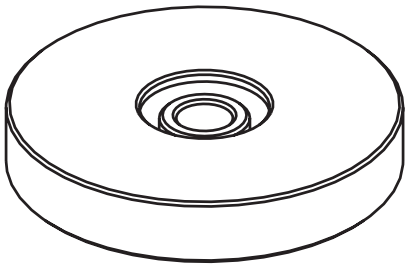

WDA00X

1

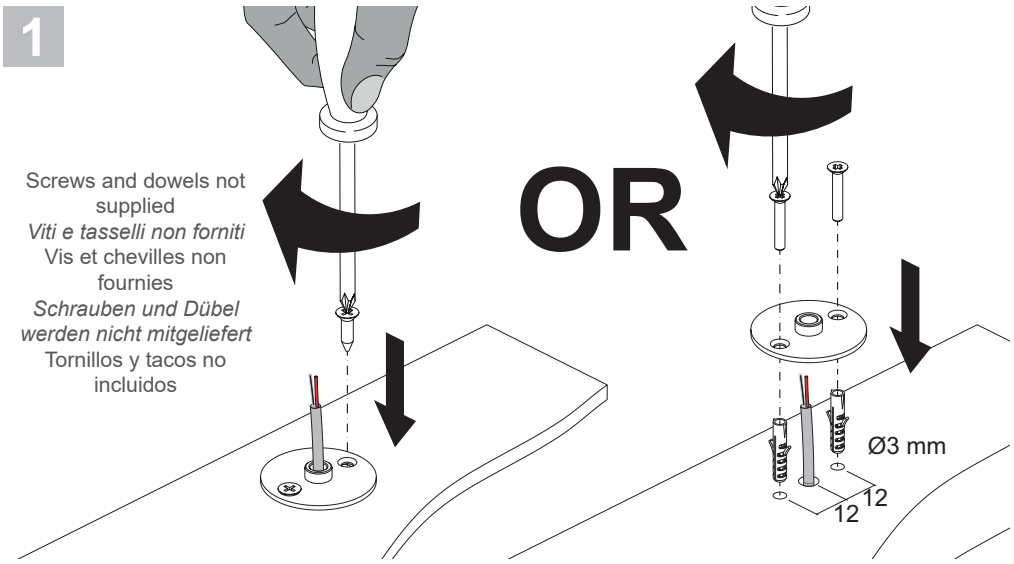

2

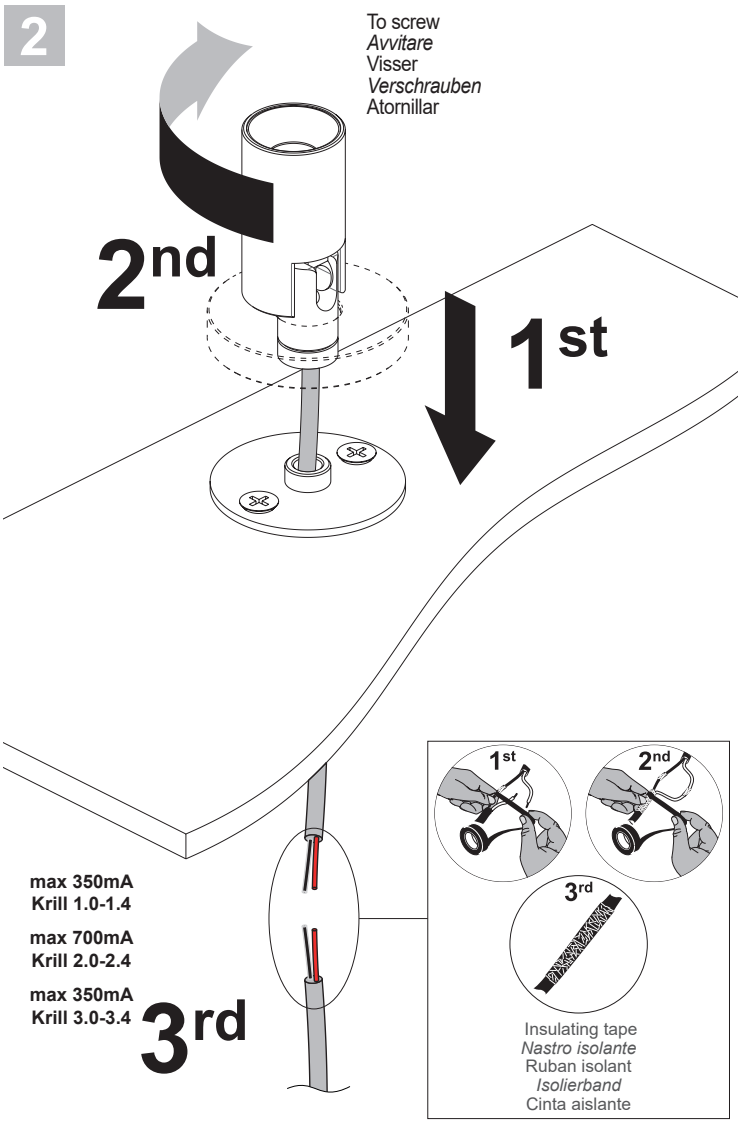

3

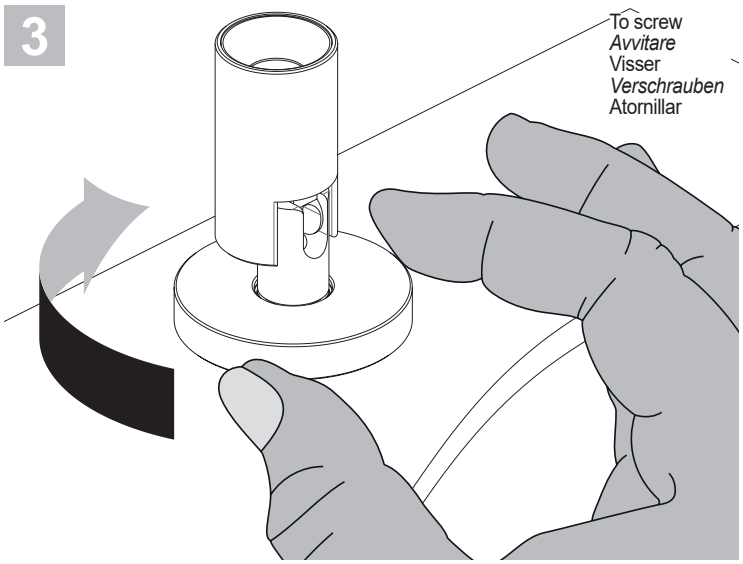

4

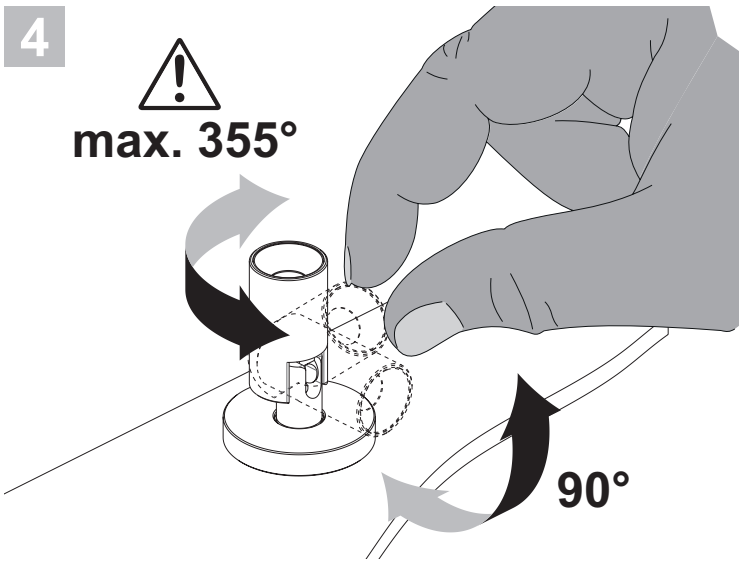

L&L Luce&Light srl / Via Trescalini, 5 / 36031 Dueville, Vicenza / Italy / T +39 0444 36 05 71 / F +39 0444 59 43 04
E lucelight@lucelight.it / www.lucelight.it