CONNECTION HOUSING
CONTENITORE PER CONNESSIONI
CONNEXIONS ÉTANCHES
WASSERDICHTE ANSCHLÜSSE
CONEXIONES ESTANCAS

Made in Italy

WD0500X

Accessories / Accessori / Accessoires / Zubehör / Accesorios

+DWD0500X0
rev. 04 02/01/2024
C90

1

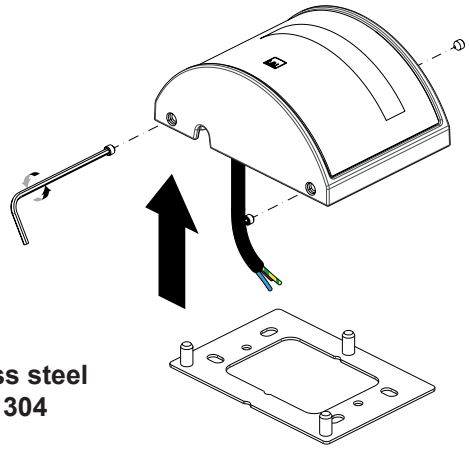

Stainless steel
AISI 304

2

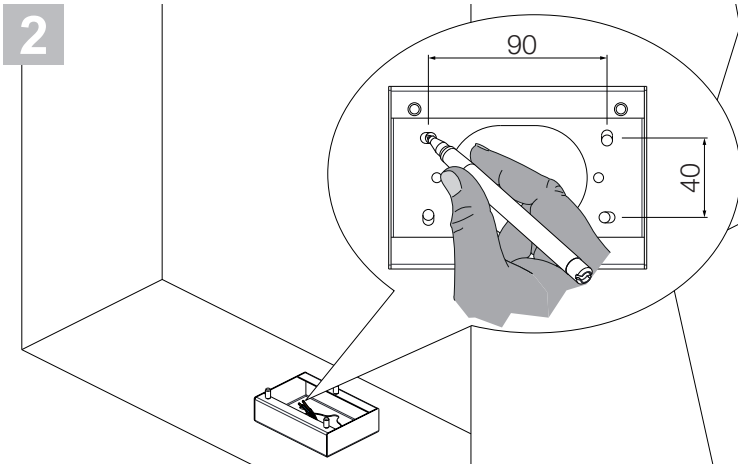

3

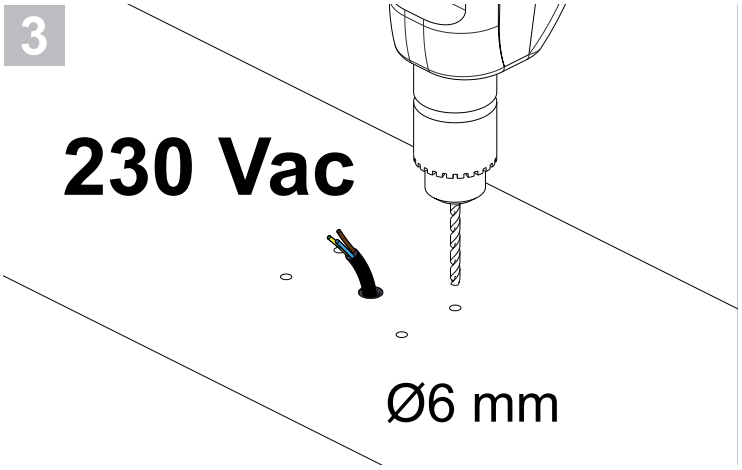

4

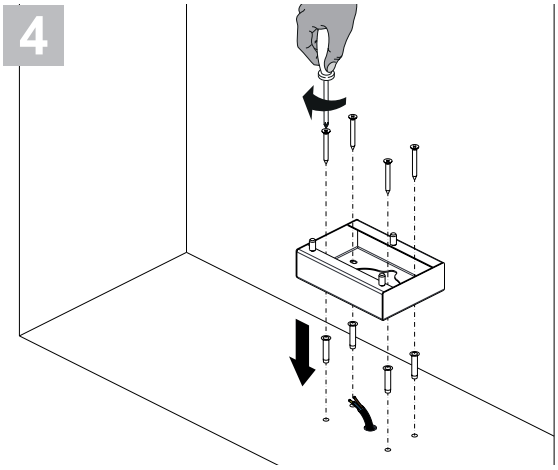

5

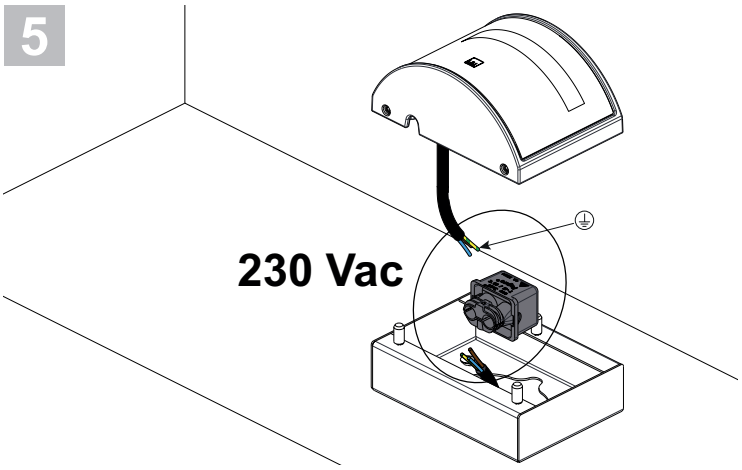

6

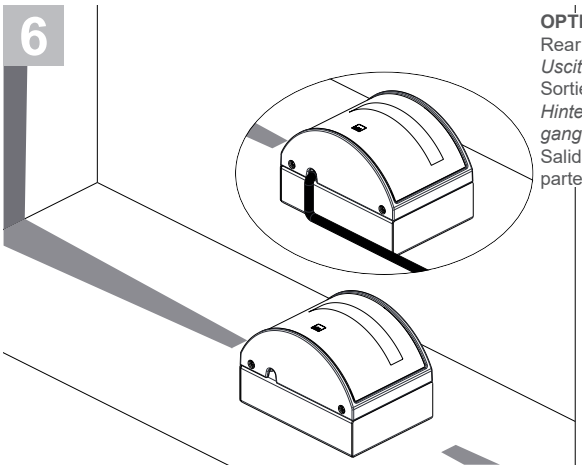

OPTION:
Rear cable exit
Uscita cavo posteriore
Sortie du câble arrière
Hinterem Kabelausgang
Salida cable en la parte posterior

7

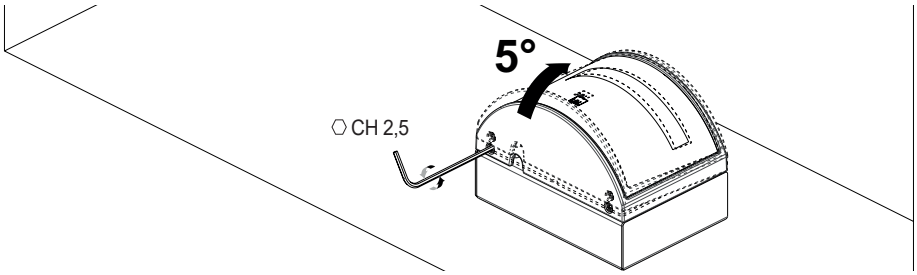

L&L Luce&Light srl / Via Trescalini, 5 / 36031 Dueville, Vicenza / Italy / T +39 0444 36 05 71 / F +39 0444 59 43 04
E lucelight@lucelight.it / www.lucelight.it