L&L
Luce&Light

Made in Italy

ANTI-GLARE HOOD
SCHERMO ANTIABBAGLIAMENTO
VISIÈRE ANTI-ÉBLOUISSEMENT
BLENDSCHUTZSCHIRM
PANTALLA ANTIDESLUMBRANTE

WB5030H

Accessories / Accessori / Accessoires / Zubehör / Accesorios

+DWB5030H0
rev. 04 20/01/2023
C90

CE UK CA

1

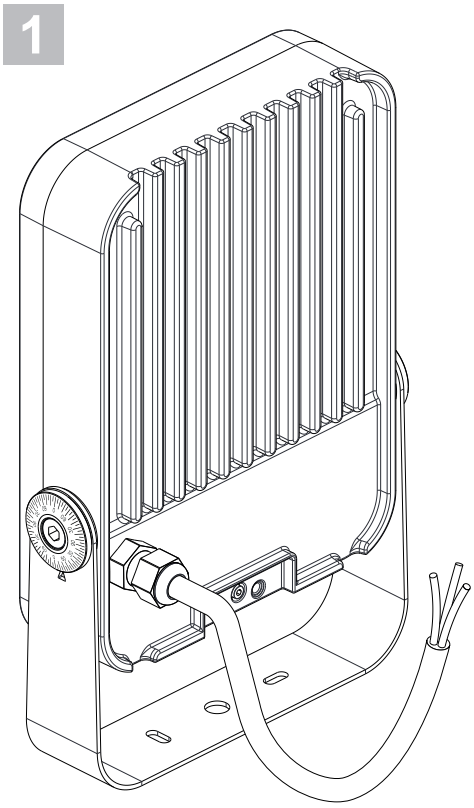

2

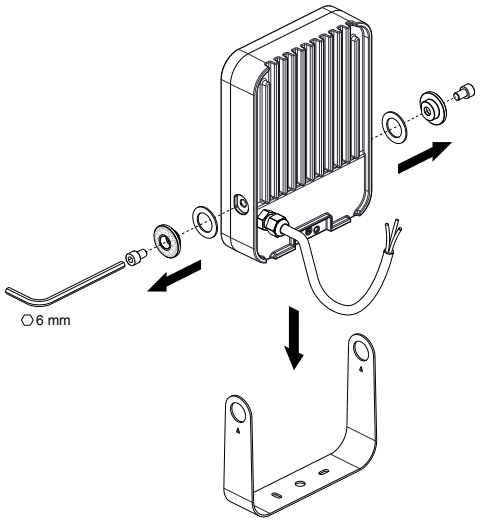

3

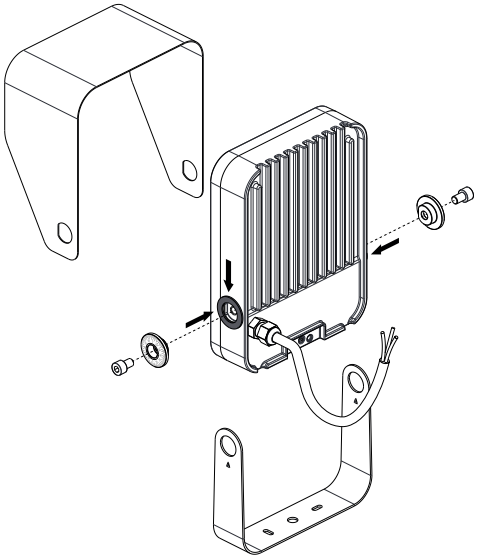

4

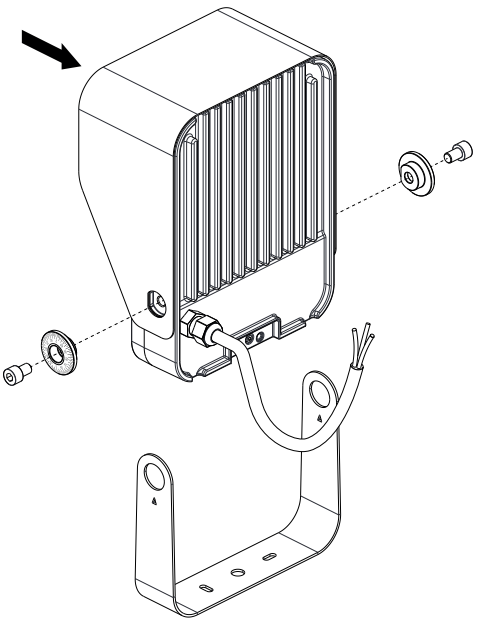

5

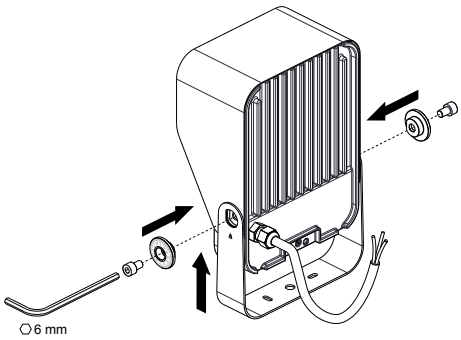

6

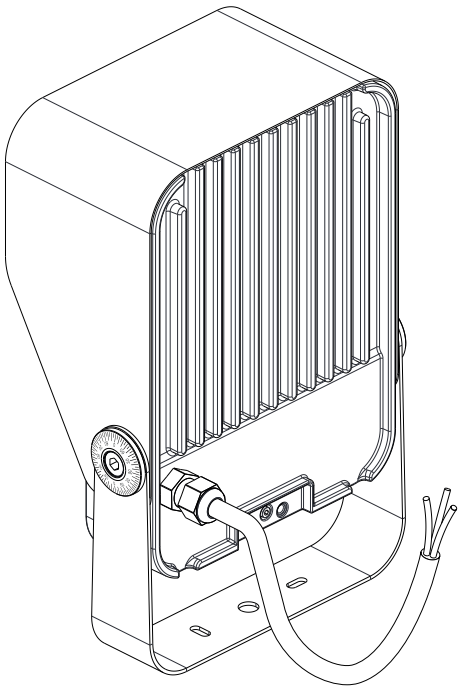

L&L Luce&Light srl / Via Trescalini, 5 / 36031 Dueville, Vicenza / Italy / T +39 0444 36 05 71 / F +39 0444 59 43 04
E lucelight@lucelight.it / www.lucelight.it