L&L
Luce&Light

Made in Italy

TRANSPARENT IP44 ROUND SCREEN (COMBINA D 3)
SCHERMO TONDO IP44 TRASPARENTE (COMBINA D 3)
ECRAN ROND TRANSPARENT IP44 (COMBINA D 3)
TRANSPARENTER IP44-RUNDBILDSCHIRM (COMBINA D 3)
PANTALLA REDONDA IP44 TRANSPARENTE (COMBINA D 3)

+DWRCC30R1T
rev. 02 17/05/2023
C90

WRCC30R1T

Accessories / Accessori / Accessoires / Zubehör / Accesorios

CE UK CA

1

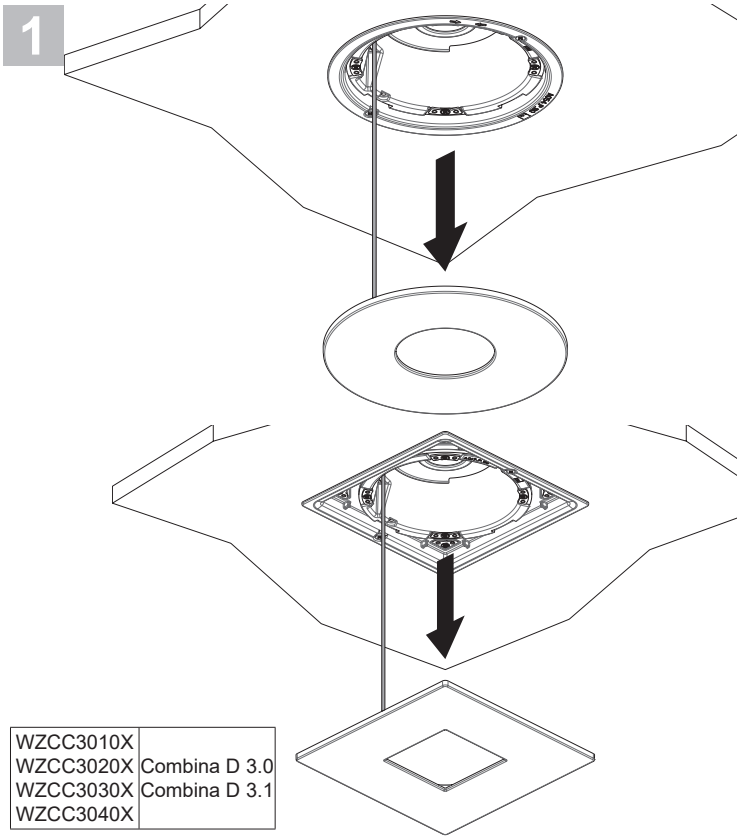

WZCC3010X	
WZCC3020X	Combina D 3.0
WZCC3030X	Combina D 3.1
WZCC3040X	

2

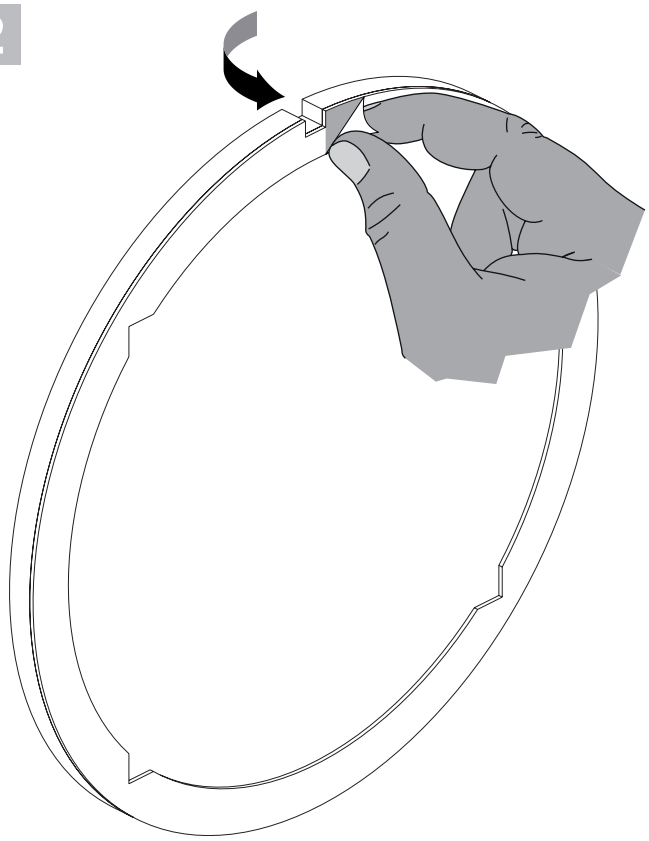

3

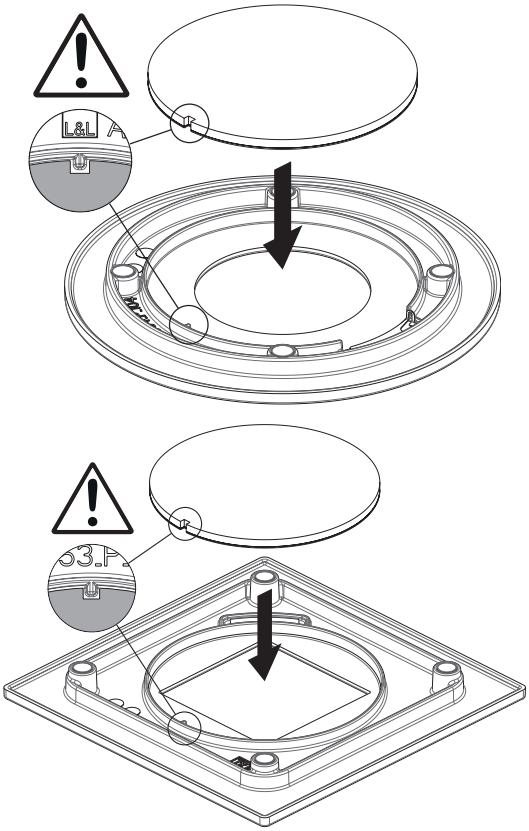

4

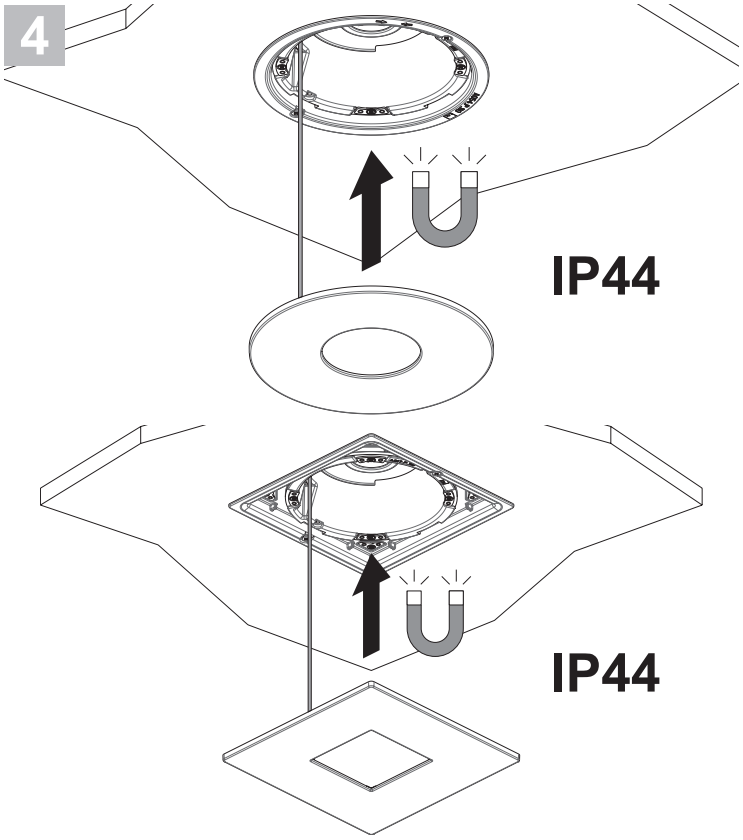

L&L Luce&Light srl / Via Trescalini, 5 / 36031 Dueville, Vicenza / Italy / T +39 0444 36 05 71 / F +39 0444 59 43 04
E lucelight@lucelight.it / www.lucelight.it