L&L
Luce&Light

Made in Italy

OBLIQUE SPACER
DISTANZIALE INCLINATO
ENTRETOISE INCLINÉE
DISTANZSTÜCK GENEIGT
SEPARADOR INCLINADO

WD0100 - WD0102 - WD0103 - WD0104

Accessories / Accessori / Accessoires / Zubehör / Accesorios

+DWD0100/102/103/104
rev. 02 03/01/2024
C90

CE UK CA

1

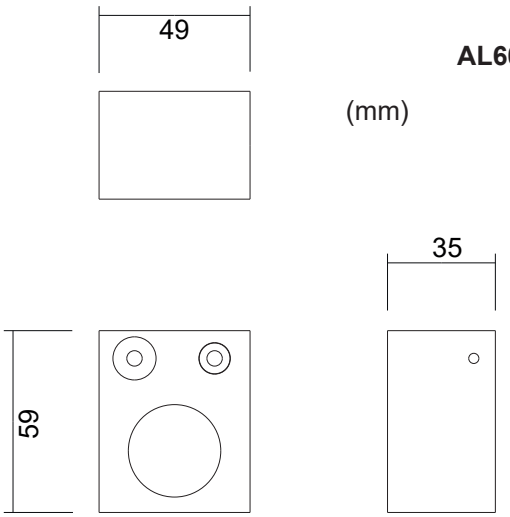

2

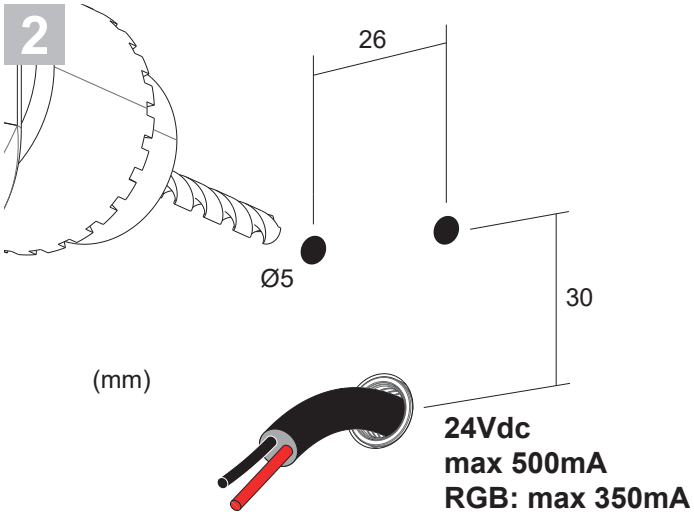

3

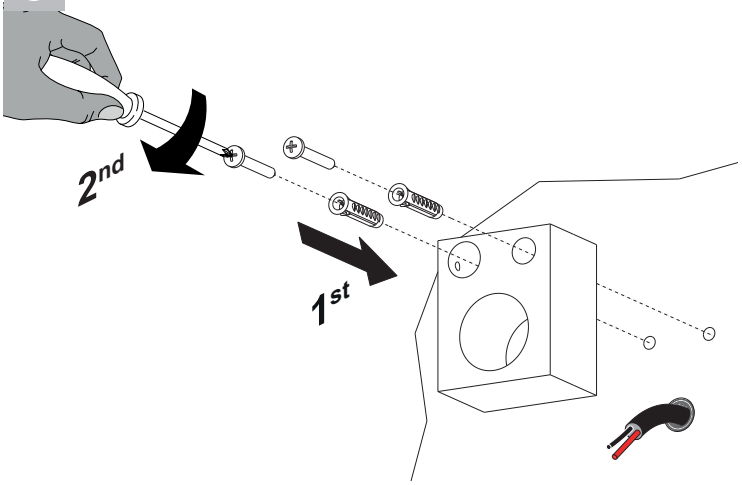

5

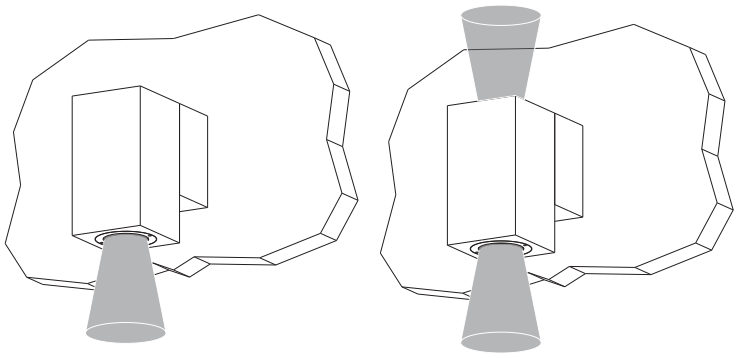

4

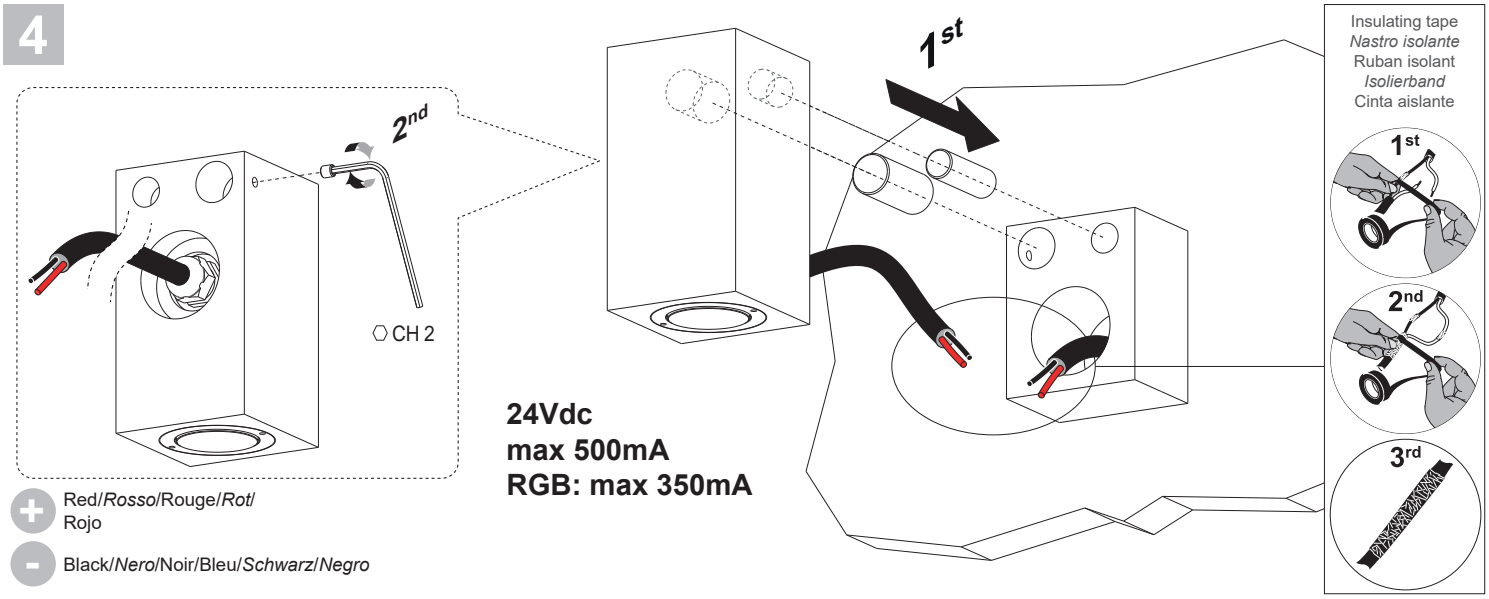

+ Red/*Rosso*/Rouge/*Rot*/Rojo

- Black/*Nero*/Noir/Bleu/*Schwarz*/*Negro*

L&L Luce&Light srl / Via Trescalini, 5 / 36031 Dueville, Vicenza / Italy / T +39 0444 36 05 71 / F +39 0444 59 43 04
E lucelight@lucelight.it / www.lucelight.it